The **U.S. Department of Transportation, Office of Inspector General**, has established the following telephone hotline to report violations.

In California call 1-800-545-7496

Outside California call 1-800-424-9071

Confidentiality may be maintained and callers may remain anonymous.

- **WARRANTY AND REPAIR AGREEMENT**

  Your attention is directed to section 5-1.47 of these special provisions regarding the requirement of a **WARRANTY AND REPAIR AGREEMENT** for the entire project.

- **PROJECT LABOR AGREEMENT**

  Your attention is directed to section 7-1.02J, "PROJECT LABOR AGREEMENT," of these special provisions regarding the requirement to enter into a Project Labor Agreement (PLA) as a condition of award for bids greater than or equal to one million dollars ($1,000,000).

- **PLANHOLDERS LIST, BIDDER INQUIRIES, AND FUTURE BID OPPORTUNITIES**

  All bidder questions/inquiries received before 12:00 p.m. the Thursday prior to the scheduled bid opening will be posted with their responses on the Public Works Web Site. Questions received after this deadline will remain unanswered.

  Planholders lists for projects out to bid for the Contra Costa County Public Works Department may also be viewed on-line, as well as projects under development for the upcoming season.

  To access the planholders list, bidder inquiries/responses, and future bid opportunities follow the directions below:

  1) Navigate to the Contra Costa County Public Works Department Online Planroom at www.cccounty.us/pwprojects for a list of projects out to bid and projects under development.

  2) Under "Advertised Project Name", click on the project name of interest to view its project information page.

  3) Under "Project Links" of the project information page, you will find the following pertinent information:

     a) Access to the "Notice to Bidders" which will give you a brief description of the project as well as how to obtain a set of bid documents.

     b) Access to the "Planholders List."

     c) Access to a list of bidder inquiries and responses under "Project Q&A."

- **CONTRACTOR REGISTRATION**

  The bidder's attention is directed to section 2-1.03 regarding the requirement of contractors and subcontractors to be registered with the Department of Industrial Relations prior to submitting a bid pursuant to Labor Code Section 1725.5, with limited exceptions from this requirement for bid purposes only under Labor Code section 1771.1(a).

DISCLAIMER

Contra Costa County Public Works Department provides the Planholders List as a convenience to Contractors, Subcontractors and suppliers. The Public Works Department is under no legal obligation to provide this information. While we make every effort to keep this information current and correct, the Public Works Department makes no guarantee as to the accuracy or completeness of these documents.

COUNTY PROJECT NO.: 7562-6D8490

The special provisions contained herein have been prepared by or under the direction of the following Registered Persons:

GENERAL

REGISTERED PROFESSIONAL ENGINEER
ABOLGASSEM AMIRZEHNI
No. 44617
CIVIL
STATE OF CALIFORNIA

12/10/19

REGISTERED CIVIL ENGINEER DATE

CIVIL

Matthew Thomas

LICENSED PROFESSIONAL ENGINEER
MATTHEW J THOMAS
C 79249
CIVIL
STATE OF CALIFORNIA

12-16-19

REGISTERED CIVIL ENGINEER DATE

STRUCTURAL

KENNETH R. HUGHES

REGISTERED PROFESSIONAL ENGINEER
KENNETH R HUGHES
No. SE2645
Exp. 12-31-20
STRUCTURAL
STATE OF CALIFORNIA

12-16-19

REGISTERED STRUCTURAL ENGINEER DATE

TABLE OF CONTENTS

COUNTY STANDARD PLANS

CD01	Storm Drain Trench Details
CD29	Type ³ - ´ nlet
CD30	Precast Manhole, Type I Base, Frame and Cover
CD35	Std Inlet/Manhole Plan , General Notes and Details
CD40	Rock Slope Protection

CITY OF BRENTWOOD STANDARD DETAIL

SS-2	Sanitary Sewer Manhole

ENVIRONMENTAL PERMITS

California Department of Fish and Wildlife Lake and Streambed Alteration Agreement, dated 12/4/2017

Regional Water Quality Control Board 401 Water Quality Certification, dated 3/16/2018

US Army Corps of Engineers 404 Water Quality Certification, dated 10/28/2019

Planning Survey Report/Certificate of Coverage

City of Brentwood Encroachment Permit Application (sample)

City of Brentwood Grading Permit Application (sample)

City of Brentwood Transportation Permit Application (sample)

East Bay Regional Park District Encroachment Permit (sample)

Project Name: Three Creeks Parkway Restoration Project
County Project Number: 7562-6D8490

Contra Costa County
Flood Control and Water Conservation District
255 Glacier Drive, Martinez, California 94553-4897

NOTICE TO BIDDERS

The Chief Engineer will receive sealed bids at the Public Works Department, 255 Glacier Drive, Martinez, California 94553-4897, until 2 o'clock p.m., on Tuesday, January 21, 2020, at which time they will be publicly opened and read, for: Three Creeks Parkway Restoration Project.

General work description: The work to be done generally consists of excavating creek channel banks, stockpiling soil on adjacent parcel, installing steel soldier pile and lagging wall, installing rock slope protection, installing pedestrian bridge, installing irrigation system, hardscaping, and installing or modifying appurtenances needed to widen Marsh Creek flood control channel.

Engineer's cost estimate:	BASE BID:	$2,762,000
	Bid Alternate 1:	$94,000
	Bid Alternate 2:	$362,000
	Bid Alternate 3:	$18,000
	Bid Alternate 4:	$99,000
	Bid Alternate 5:	$48,000
	Bid Alternate 6:	$210,000
Number of Working Days:	BASE BID:	135 days
	Bid Alternate 1:	3 additional days
	Bid Alternate 2:	5 additional days
	Bid Alternate 3:	0 additional days
	Bid Alternate 4:	3 additional days
	Bid Alternate 5:	3 additional days
	Bid Alternate 6:	1 additional day

This is a federal aid contract. You must comply with the requirements of the EPA's Disadvantaged Business Enterprise (DBE) Program as outlined in these special provisions.

A pre-bid meeting will be held on Monday, January 6, 2020, at 2:00 p.m. at the Public Works Department to cover project construction. Prospective bidders attendance is recommended but not mandatory.

Contract Documents, including plans and specifications, may be viewed **but not obtained** at the Public Works Department, 255 Glacier Drive, Martinez, California 94553-4897, Monday - Thursday (7:00 a.m. - 5:00 p.m.), and Friday (7:00 a.m. – noon and 1:00 - 4:00 p.m.). Plans and specifications can be obtained via the Contra Costa County Public Works Department's Online Planroom at www.cccounty.us/pwprojects. A non-refundable service charge for bid documents is required in the amount of $150 (sales tax included). Shipping charges are extra, depending on the delivery method. The Public Works Department does not guarantee the arrival of the plans and specifications in time for bidding. For more information about obtaining plans and specifications by mail, please call Blueprint Express at (707) 745-3593. You may obtain electronic PDF copies of the plans and specifications upon purchase of the bid package through the Online Planroom for no additional service charge.

This project is to be advertised pursuant to Public Contract Code 21191.

This project is subject to the "Buy America" provisions of the Surface Transportation Assistance Act of 1982 as amended by the Intermodal Surface Transportation Efficiency Act of 1991.

This contract is subject to state contract nondiscrimination and compliance requirements pursuant to Government Code, Section 12990.

The Contractor must possess a valid Class A or Class C12 License at the time the Contract is awarded.

Prior to submitting a bid, the Contractor and subcontractors must be registered with the Department of Industrial Relations and qualified to perform public work pursuant to Labor Code section 1725.5, subject to limited legal exceptions under Labor Code section 1771.1.

This contract will be subject to compliance monitoring and enforcement by the Department of Industrial Relations pursuant to Labor Code section 1771.4.

Bids must cover the entire project, and neither partial nor contingent bids will be considered.

The successful bidder must furnish a payment bond and a performance bond.

Pursuant to Public Contract Code Sections 7201 and 9203, the Public Works Department will retain 5 percent of the contract price until final completion and acceptance of the project.

Bidders are hereby notified that securities may be substituted for any monies withheld by the County of Contra Costa to ensure performance under the construction contract, in accordance with Public Contract Code Section 22300 and the General Conditions of the Contract. Such securities will be valued by the County Treasurer-Tax Collector, whose decision will be final. Also, types of securities which are not listed in Government Code Section 16430 or Public Contract Code Section 22300 must be approved as eligible for investment under Public Contract Code Section 22300 by the County Treasurer-Tax Collector before bid opening. Unless such securities are prequalified before bid opening, they will not be accepted by the County as security.

For your convenience, the liquidated damages table from section 8-1.10A of the Revised Standard Specifications has been provided below.

Liquidated damages for all work except plant establishment are as shown in the following table:

Liquidated Damages

Total bid		Liquidated damages per day
From over	To	
$0	$60,000	$1,400
$60,000	$200,000	$2,900
$200,000	$500,000	$3,200
$500,000	$1,000,000	$3,500
$1,000,000	$2,000,000	$4,000
$2,000,000	$5,000,000	$4,800
$5,000,000	$10,000,000	$6,800
$10,000,000	$20,000,000	$10,000
$20,000,000	$50,000,000	$13,500
$50,000,000	$100,000,000	$19,200
$100,000,000	$250,000,000	$25,300

Pursuant to Section 1773 of the Labor Code, the general prevailing wage rates in the county in which the work is to be done have been determined by the Director of the California Department of Industrial Relations. These wages are set forth in the General Prevailing Wage Rates for this project, available at the above address and available from the California Department of Industrial Relations' Internet web site at http://www.dir.ca.gov. Future effective general prevailing wage rates which have been predetermined and are on file with the California Department of Industrial Relations are referenced but not printed in the general prevailing wage rates.

The Federal minimum wage rates for this project as predetermined by the United States Secretary of Labor are set forth in the PROPOSAL and CONTRACT book. If there is a difference between the minimum wage

rates predetermined by the Secretary of Labor and the prevailing wage rates determined by the Director of the California Department of Industrial Relations for similar classifications of labor, the Contractor and his subcontractors must pay not less than the higher wage. The County of Contra Costa will not accept lower State wage rates not specifically included in the Federal minimum wage determinations. This includes "helper" (or other classifications based on hours of experience) or any other classification not appearing in the Federal wage determinations. Where Federal wage determinations do not contain the State wage rate determination otherwise available for use by the Contractor and subcontractors, the Contractor and subcontractors must pay not less than the Federal minimum wage rate which most closely approximates the duties of the employees in question.

Contra Costa County, under Title VI of the Civil Rights Act of 1964 and related statutes, ensures that no person in Contra Costa County shall, on the grounds of race, color, national origin, sex, disability, or age, be excluded from participation in, be denied the benefits of, or be otherwise subjected to discrimination under any program or activity it administers.

The U.S. Department of Transportation (DOT) provides a toll-free "hotline" service to report bid rigging activities. Bid rigging activities can be reported Mondays through Fridays, between 9:00 a.m. and 5:00 p.m., eastern time, Telephone no. 1-800-424-9071. Anyone with knowledge of possible bid rigging, bidder collusion, or other fraudulent activities should use the "hotline" to report these activities. The "hotline" is part of the DOT's continuing effort to identify and investigate highway construction contract fraud and abuse and is operated under the direction of the DOT Inspector General. All information will be treated confidentially and caller anonymity will be respected.

The Contra Costa County Board of Supervisors has adopted a policy, which applies to this project if the contract amount equals or exceeds $1,000,000, that requires the successful bidder (prime contractor), as a condition of contract award, to negotiate and sign a project labor agreement (PLA) with the Contra Costa Building and Construction Trades Council. The prime contractor must require all subcontractors, as a condition of working on the project, to sign the PLA. In addition, there are specific Affirmative Action and Equal Employment Opportunity requirements for hiring of new employees for this contract. Detailed information and requirements are included in section 7-1.02J of these special provisions and the Proposal and Contract.

All bidder questions/inquiries received before 12:00 p.m. the Thursday prior to the scheduled bid opening will be posted with their responses on the Public Works Web Site (www.cccounty.us/pwprojects). Questions received after this deadline will remain unanswered. The current planholders list can also be found at this website.

The said Board reserves the right to reject any and all bids or any portion of any bid and/or waive any irregularity in any bid received.

For questions regarding the project contact Gus Amirzehni, Flood Control District, at (925) 313-2128.

By order of the Board of Supervisors of Contra Costa County
David Twa
Clerk of the Board of Supervisors and County Administrator

By _____
Deputy

Dated:

Publication dates:

_____

_____

DIVISION I GENERAL PROVISIONS

1 GENERAL

Add to the 1st table of section 1-1.06:

OR	Owner's Representative
HDPE	High density polyethylene

Add or Replace the following definitions in section 1-1.07B with:

Agency: The legal entity for which the work is being performed.

Bid Book: The Proposal and Contract.

Board of Supervisors: The Board of Supervisors of Contra Costa County, State of California is the governing board for the agency having jurisdiction over the work being done under this contract.

Department, Department of Transportation, Director, Director of Transportation: The Board of Supervisors of Contra Costa County, State of California.

Deputy Director Transportation Engineering, or Engineer: The Chief Engineer of Contra Costa County Flood Control and Water Conservation District, State of California, acting either directly or through properly authorized agents, such agents acting within the scope of the particular duties entrusted to them.

District: Contra Costa County Flood Control and Water Conservation District (CCCFC&WCD), a political subdivision of the State of California. The agency having jurisdiction over the work being done under this contract.

Holiday: Holiday shown in the following table:

Holidays

Holiday	Date observed
Every Sunday	Every Sunday
New Year's Day	January 1st
Birthday of Martin Luther King, Jr.	3rd Monday in January
President's Day	3rd Monday in February
Memorial Day	Last Monday in May
Independence Day	July 4th
Labor Day	1st Monday in September
Veterans Day	November 11th
Thanksgiving Day	4th Thursday in November
Day after Thanksgiving Day	Day after Thanksgiving Day
Christmas Day	December 25th

When a holiday falls on a Saturday, the preceding Friday shall be considered to be the legal holiday. When a holiday other than Every Sunday falls on a Sunday, the following Monday shall be considered to be the holiday.

Informal-bid contract: Contract less than $200,000 and authorized by Pub Cont Code § 22034

Notice to Bidders: The Notice to Contractors.

Owner's Representative: Agency's point of contact for contractor. Used interchangeably with Engineer.

2-1.12B Good Faith Efforts

2-1.12B(1) General

Make work available to DBEs and select work parts consistent with available DBEs, including subcontractors, suppliers, service providers, and truckers.

2-1.12B(2) DBE Participation

Pursuant to 40 CFR § 33.302, provide a copy of EPA Form 6100-2 “*DBE Subcontractor Participation Form*” to all DBE subcontractors. This form may be completed and submitted at any time during the project.

2-1.12B(3) DBE Commitment Submittal

Pursuant to 40 CFR § 33.302, complete EPA Form 6100-3 “*DBE Subcontractor Performance Form*” for each DBE subcontractor and submit in your project bid to the Agency; or at a minimum, within two (2) workings days of the bid opening.

Pursuant to 40 CFR § 33.302, complete EPA Form 6100-4 “ ' % (6 X E F R Q W U D F W R U , 8 W L O L] D W L R listing all DBE subcontractors, suppliers, manufacturers, and truckers, including the dollar value of the accepted subcontracts, quotes or sub-bids, and submit in your project bid to the Agency; or at a minimum, within two (2) workings days of the bid opening.

2-1.12B(4) DBE Good Faith Efforts Requirements

Pursuant to 40 CFR § 33.301, you are required to make the following good faith efforts whenever procuring construction, equipment, services, and supplies, and to require that sub-contractors also comply:

1. Ensure DBEs are made aware of contracting opportunities to the fullest extent practicable through outreach and recruitment activities.
2. Make information on forthcoming opportunities available to DBEs and arrange time frames for contracts and establish delivery schedules where the requirements permit, in a way that encourages and facilitates participation by DBEs in the competitive process. This includes, whenever possible, posting solicitations for bids or proposals for a minimum of 30 calendar days before the bid or proposal closing date.
3. Consider in the contracting process whether firms competing for large contracts could subcontract with DBEs.
4. Encourage contracting with a consortium of DBEs when a contract is too large for one of these firms to handle individually.
5. Use the services and assistance of the SBA and the Minority Business Development Agency of the Department of Commerce.
6. If the prime contractor awards subcontracts, require the prime contractor to take the steps in paragraphs (1) through (5) of this section.

Records documenting compliance with the six good faith efforts shall be retained.

You must follow the six good faith efforts only if doing so would not conflict with existing Tribal or Federal law, including but not limited to the Indian Self-Determination and Education Assistance Act.

Examples of actions and documentation for the good faith efforts include, but are not limited to:

1. Use of current bidders/solicitation list or databases that includes DBEs;
2. Use of trade journals/databases (local or national);
3. Date of last update to bidders/solicitation list or database;
4. How were DBEs made aware of the solicitation;
5. Where and when posted;
6. Sample of letters or records of communication with DBEs, SBA, Minority Business Development Agency;
7. Sample of advertisement/posting;
8. How long/frequency of advertisement/posting;
9. Document good faith efforts of contractors;

10. Identify type of outreach that was conducted;
11. Date of pre-bid conference;
12. Attendance list for pre-bid conference;
13. Attendance list for pre-bid conference;
14. Participation date of last DBE procurement outreach conference;
15. Process used to determine if large requirement could be divided into smaller requirements;
16. Include unsuccessful bidders on database or list

2-1.12B(5) DBE Good Faith Efforts Submittal

Upon request by the Agency, furnish your good faith effort documentation. If the Agency requests it from you, submit the information within 2 business days of the request.

2-1.12C DBE Bidder Surveys

Pursuant to EPA DBE regulations, 40 CFR § 33.501, the agency requires information from all firms submitting bids, sub-bids, and quotes to develop a bidders list.

1. Distribute copies of the “Construction Industry Survey” form, copy attached to the Proposal, to all subcontractors, suppliers and truckers who submit project sub-bids or quotes; and request them to complete the form and return them to you prior to the bid submittal, and

2. Complete a copy of the “Construction Industry Survey” form for your company and submit it along with the sub-bidders survey forms in your project bid to the Agency; or at a minimum, submit all “Construction Industry Survey” forms within two (2) workings days of the bid opening.

Delete section 2-1.15, "DISABLED VETERAN BUSINESS ENTERPRISES".

Delete section 2-1.18, "SMALL BUSINESS AND NON–SMALL BUSINESS SUBCONTRACTOR PREFERENCES".

Delete section 2-1.27, "CALIFORNIA COMPANIES".

Replace section 2-1.33A with:

Complete the forms in the Bid book. Submit the forms with your bid.

Use the forms provided by the Department.

Failure to submit the forms and information as specified may result in a nonresponsive bid.

If an agent other than the authorized corporate officer or a partnership member signs the bid, file a Power of Attorney with the Department either before opening bids or with the bid. Otherwise, the bid may be nonresponsive.

An Equal Employment Opportunity Certification form is included in the Bid book. Signing the Proposal also constitutes signature and submittal of this form by the bidder. Upon request by Agency, promptly furnish completed copies of the Equal Employment Opportunity Certification forms signed by all subcontractors identified to perform work on this project.

In conformance with Public Contract Code Section 7106, a Noncollusion Declaration is included in the Proposal. Signing the Proposal also constitutes signature of the Noncollusion Declaration.

Upon request from the Agency furnish copies of all subcontracts; all accepted subcontractor or supplier quotes; and/or written explanation as to your plan for compliance within 48 hours of such a request. Non-compliance with such a request may be grounds for declaring your bid as non-responsive and therefore ineligible for award.

3 CONTRACT AWARD AND EXECUTION

Replace 2nd paragraph of section 3-1.02A with:

In the case of unit basis items, the amount set forth under the "Item Total" column must be the product of the unit price bid and the estimated quantity for the item.

In case of discrepancy between the unit price and the total set forth for a unit basis item, the unit price prevails, except as provided in (a) or (b), as follows:

(a) If the amount set forth as a unit price is unreadable or otherwise unclear, or is omitted, or is the same as the amount as the entry in the item total column, then the amount set forth in the item total column for the item prevails and will be divided by the estimated quantity for the item and the price thus obtained will be the unit price;

(b) (Decimal Errors) If the product of the entered unit price and the estimated quantity is exactly off by a factor of ten, one hundred, etc., or one-tenth, or one-hundredth, etc. from the entered total, the discrepancy will be resolved by using the entered unit price or item total, whichever most closely approximates percentagewise the unit price or item total in the Agency's Engineer Estimate of cost.

If both the unit price and the item total are unreadable or otherwise unclear, or are omitted, the bid may be deemed irregular. Likewise if the item total for a lump sum item is unreadable or otherwise unclear, or is omitted, the bid may be deemed irregular unless the project being bid has only a single item and a clear, readable total bid is provided.

Symbols such as commas and dollar signs will be ignored and have no mathematical significance in establishing any unit price or item total or lump sums. Cents symbols also have no significance in establishing any unit price or item total since all figures are assumed to be expressed in dollars and/or decimal fractions of a dollar. Written unit prices, item totals and lump sums will be interpreted according to the number of digits and, if applicable, decimal placement. Bids on lump sum items must be item totals only; if any unit price for a lump sum item is included in a bid and it differs from the item total, the items total will prevail.

The lowest responsible bid will be determined under Section 20103.8, subdivision (b) of the California Public Contract Code, based on the sum of the prices for construction of the Base Bid, Bid Alternate 1 and Bid Alternate 2.

Replace section 3-1.02B with:

3-1.02B Tied Bids

The Department breaks a tied bid with a coin toss.

Replace section 3-1.04 with:

3-1.04 CONTRACT AWARD

Submit any bid protest in writing to the Contra Costa County Public Works Department at 255 Glacier Drive Martinez, CA 94553 to the attention of the Public Works Director.

The award of the contract, if it be awarded, will be to the lowest responsible bidder whose proposal complies with all the requirements prescribed herein, including without limitation the requirements for a Project Labor Agreement (applicable to contracts of $1,000,000 or more) and the DBE program requirements including meeting the DBE goal and/or submitting a complete good faith effort documentation. Such award, if made, will be made within the time period during which bids may not be withdrawn as specified below.

The County reserves the right to award a contract for the Base Bid only, Base Bid plus any number or combination of Bid Alternates, or reject all bids.

The time period in which bids may not be withdrawn shall be within 37 days after the opening of the proposals for contract bid amounts under $1,000,000 or within 50 days for contract bid amounts equal to or exceeding $1,000,000, which require a Project Labor Agreement.

An inadvertent error in listing a subcontractor in a bid proposal who is not registered pursuant to Labor Code section 1725.5 will not be grounds for filing a bid protest or grounds for considering the bid nonresponsive, provided that any of the following apply:

1. Subcontractor is registered prior to the bid opening
2. Within 24 hours after the bid opening, the subcontractor is registered and has paid the penalty registration fee specified in subparagraph (E) of paragraph (2) of subdivision (a) of Labor Code section 1725.5
3. Subcontractor is replaced by another registered subcontractor pursuant to Public Contract Code section 4107

The Department may extend the specified award period if the bidder agrees.

No contract may be made to parties listed on the General Services Administration's List of Parties Excluded from Federal Procurement or Nonprocurement Programs in accordance with E.O. 12549 and (2 ³ ' H E D U P H Q W D Q G 6 X V S H Q V L R Q ' 7 K L V O L V W F R Q W D L Q V W K H or otherwise excluded by agencies, and contractors declared ineligible under statutory or regulatory authority other than E.O. 12549. By signing this Agreement, the contractor certifies that it and its principal employees are not presently debarred, suspended, proposed for debarment, declared ineligible, or voluntarily excluded from participation in this transaction by any Federal department or agency.

Replace section 3 -1.05 with:

3-1.05 CONTRACT BONDS (PUB CONT CODE §§ 10221 AND 10222)

At no additional expense to the Agency, the successful bidder must furnish 2 bonds at the time of execution of the agreement or contract for the work:

1. Payment bond to secure the claim payments of laborers, workers, mechanics, or materialmen providing goods, labor, or services under the Contract. This bond must be equal to at least 100 percent of the total bid.
2. Performance bond to guarantee the faithful performance of the Contract. This bond must be equal to at least 100 percent of the total bid.

The Department furnishes the successful bidder with bond forms. These bonds must be executed by an admitted surety insurer and must be satisfactory to the Agency.

Replace "10 days" in item 2 of the 1st paragraph of section 3 -1.07 with:

30 days

Delete section 3 -1.08, "SMALL BUSINESS PARTICIPATION REPORT".

Delete section 3 -1.11, "PAYEE DATA RECORD"

Replace section 3 -1.18 with:

3-1.18 CONTRACT EXECUTION

Delivery of the Contract to you for execution constitutes notice of contract award. The successful bidder must sign the Contract form and return with the following items below:

1. The originals and one copy of each of the contract bonds specified in these special provisions.
2. One of the following:

1.4. Standard specifications
1.5. Revised standard plans
1.6. Standard plans
1.7. Supplemental project information

2. Written numbers and notes on a drawing govern over graphics
3. Detail drawing governs over a general drawing
4. Specific specification governs over a general specification
5. Specification in a section governs over a specification referenced by that section

In the event of a discrepancy between units shown on plans, in the special provisions and in the proposal, the units shown in the proposal govern.

If a discrepancy is found or confusion arises, submit an RFI.

Delete section 5-1.09, "PARTNERING".

Add to section 5-1.13A:

Comply with the provisions in Section 7108.5 of the Business and Professions Code concerning prompt payment to subcontractors.

Pay all subcontractors no later than 7 days after receipt of each progress payment, unless otherwise agreed to in writing, the respective amounts allowed the contractor on account of the work performed by the subcontractors, to the extent of each subcontractors interest therein. Any violation of Section 7108.5 of the Business and Professional Code will subject the violating contractor or subcontractor to the penalties, sanction and other remedies of that section. Any delay or postponement of payment over 30 days after receipt of each payment may take place only for good cause and with the Agency's prior written approval. This requirement must not be construed to limit or impair any contractual, administrative, or judicial remedies otherwise available to the prime contractor or subcontractor in the event of a dispute involving late payment or nonpayment by the prime contractor, deficient subcontract performance, or noncompliance by a subcontractor. This provision applies to both DBE and non-DBE prime contractors and subcontractors.

The Agency will hold retainage from the prime contractor and will make prompt and regular incremental acceptances of portions of the contract work, as determined by the Agency, and pay retainage to the prime contractor based on these acceptances. Return all monies withheld in retention from a subcontractor within 7 days after receiving payment for work satisfactorily completed and accepted including incremental acceptances of portions of the contract work by the Agency in conformance with these specifications. Any delay or postponement of payment over 30 days after receipt of each payment may take place only for good cause and with the agency's prior written approval. Any violation of Section 7108.5 of the Business and Professional Code will subject the violating contractor or subcontractor to the penalties, sanction and other remedies of that section. This requirement must not be construed to limit or impair any contractual, administrative, or judicial remedies otherwise available to the prime contractor or subcontractor in the event of a dispute involving late payment or nonpayment by the prime contractor, deficient subcontract performance, or noncompliance by a subcontractor.

Replace the 2nd paragraph of section 5-1.13(B)(1) with:

Use each DBE as listed on EPA Form 6100-4 "*DBE Subcontractor Utilization Form*" unless you receive authorization for a substitution. Ensure that all subcontracts and agreements with DBEs to supply labor or materials are performed under 40 CFR 33.

Delete the 1st paragraph of section 5-1.13(B)(2).

Replace the 2nd paragraph of section 5-1.13(B)(2) with:

DBEs must perform work or supply materials as listed on EPA Form 6100-4 "*DBE Subcontractor Utilization Form*".

Replace item 11 in the list in the 4th paragraph of section 5-1.13(B)(2) with:

11. Department determines other documented good cause under 40 CFR 33.

Replace the last sentence of the 6th paragraph of section 5-1.13(B)(2) with:

Refer to 40 CFR 33 for guidance regarding good faith efforts.

Replace the last paragraph in section 5-1.13(B)(2) with:

Unless the Department authorizes a request to terminate or substitute a listed DBE, the Department does not pay for work unless it is performed or supplied by the DBE listed on EPA Form 6100-4 "*DBE Subcontractor Utilization Form*". You may be subject to other sanctions under 40 CFR 33.

Delete section 5-1.13C, "Disabled Veteran Business Enterprises".

Delete section 5-1.13D, "Non-Small Businesses".

Replace 1st and 2nd paragraphs of section 5-1.20B(3) with:

You will be required to obtain encroachment, grading and transportation permits from the City of Brentwood for encroachment into City right of way and hauling within the City limits, for grading activities and for transporting "wide loads" within City limits.

The permits will be issued at no cost. However this does not include actual inspection costs.

Contact Jagtar (Jack) Dhaliwal, Assistant Director of Public Works/Engineering, at (925) 516-5128 for information and details to obtain the permit.

A sample copy of the City of Brentwood encroachment, grading and transportation permits are attached for your information. Additional provisions may also be included in the final encroachment permit. You will be required to comply with the provisions of the final encroachment permit. In the event of any conflicts between the requirements of the encroachment permit and what is shown on the plans or specified in the Standard Specifications and these special provisions, the final encroachment permit will govern. No extension of time will be granted for work involved in obtaining the encroachment permit or for doing the work covered by the permit.

You will be required to obtain an encroachment permit from the East Bay Regional Park District for trail closures and work within the East Bay Regional Park District easement.

The estimated cost of the permit is $1,500. This does not include actual inspection costs.

Contact Nate Luna at (510) 544-2564 or nluna@ebparks.org for information and details to obtain the permit.

A sample copy of the East Bay Regional Park District Encroachment Permit is attached for your information. Additional provisions may also be included in the final encroachment permit. You will be required to comply with the provisions of the final encroachment permit. In the event of any conflicts between the requirements of the encroachment permit and what is shown on the plans or specified in the Standard Specifications and these special provisions, the final encroachment permit will govern. No extension of time will be granted for work involved in obtaining the encroachment permit or for doing the work covered by the permit.

Add to the end of section 5-1.20C:

This project does not include work on the railroad property, but a railroad is shown on the general plan sheet within the project limits. Do not trespass on the railroad property at the north end of the project.

REPAIR AGREEMENT found in the Proposal. This agreement must be executed without contingencies prior to the acceptance of the work as complete.

^^

6 CONTROL OF MATERIALS

Replace last sentence of the 3rd paragraph of section 6-1.02 with:

Returning and disposing of Department-furnished materials is included in the contract price paid for various items of work.

Replace the 2nd paragraph of section 6-1.03 with:

Test local materials to be used in the work for compliance with the specifications at your expense.

Replace section 6-1.04A with:

6-1.04A General

BUY AMERICA REQUIREMENTS. -- Attention is directed to the “Buy America” requirements of the Title 23 United States Code, Section 313 and the regulations adopted pursuant thereto. In accordance with said law and regulations, all manufacturing processes for steel and iron materials furnished for incorporation into the work on this project must occur in the United States; with the exception that pig iron and processed, pelletized and reduced iron ore manufactured outside of the United States may be used in the domestic manufacturing process for such steel and iron materials. The application of coatings, such as epoxy coating, galvanizing, painting, and any other coating that protects or enhances the value of such steel or iron materials, is considered a manufacturing process subject to the “Buy America” requirements.

Furnish a Certificate of Compliance, conforming to the provisions in section 6-2.03C, Certificates of Compliance, for steel and iron materials. The certificates, in addition to certifying that the materials comply with the specifications, must also specifically certify that all manufacturing processes for the materials occurred in the United States, except for the exceptions allowed herein. The requirements imposed by said law and regulations do not prevent a minimal use of foreign steel and iron materials if the total combined cost of such materials used does not exceed one-tenth of one percent (0.1%) of the total contract cost or $2,500, whichever is greater. Furnish the Engineer acceptable documentation of the quantity and value of any foreign steel and iron prior to incorporating such materials into the work.

Add to section 6-1.05:

Engineer’s decision to accept substitution is final.

Add to section 6-2.02A:

The quality assurance/acceptance (QA) testing performed by the Engineer does not relieve you of your responsibility to perform your own quality control (QC) testing as required by the Standard Specifications and these special provisions. You are responsible for the quality of the materials and the quality of work, including your subcontractors, suppliers, and fabricators. You may elect to perform QC testing in addition to those required by these special provisions to ensure satisfactory compliance with all contract requirements.

Add to section 6-2.02B:

The QC program applies to the following areas of work:

1. Earthwork under Section 19.
2. Subbases and Bases under Division IV.

3. Seal Coats under Section 37.
4. Concrete Pavement under Section 40.
5. Structures under Division VI.
6. Drainage under Division VII.
7. Slope Protection under Section 72.
8. Materials under Division XI.

Delete the last sentence of section 6-2.02B.

Add to section 6-2.02C:

The QC Manager must have a minimum of 10 years of construction experience on projects similar to the work under this contract. Identify an Alternate QC Manager to serve in the event of the QC Manager's absence. The requirements for the Alternate QC Manager are the same as for the designated QC Manager.

Replace section 6-2.02D with:

6-2.02D Contractor Quality Control Plan

6-2.02D(1) General

Implement a Contractor Quality Control Plan (CQCP) that consists of plans, procedures, and organization necessary to construct a final product which complies with these specifications. The CQCP must cover all construction operations, both onsite and offsite, that require testing to ensure compliance.

Meet with the Engineer and discuss the CQCP requirements at the preconstruction conference or in a separate meeting a minimum of 9 working days prior to the start of construction.

During this meeting, a mutual understanding of the following CQCP details will be developed:

1. Construction activities and materials to be included in CQCP.
2. Test procedures to be implemented including frequency and acceptance standards.
3. Certified testing facility to be used.
4. QC activities/procedures/testing.
5. Reporting procedures including deadlines to distribute test results to the Engineer.
6. Remediation or corrective actions.
7. Interrelationship of the QC Manager and the Engineer's Material and Testing Laboratory QA and testing activities.

Meeting minutes that document a mutual understanding of the CQCP will be prepared by the Engineer and distributed to the Contractor and Engineer. The minutes will become a part of the contract file.

6-2.02D(2) Submittals

Within 3 working days of the meeting, start the following process for CQCP approval:

1. Submit 3 copies of the CQCP and allow 3 working days for the Engineer's review. If revisions are required, the Engineer provides comments and specifies the date that the review stopped.
2. Revise and resubmit the CQCP within 2 working days of receipt of the Engineer's comments.
3. The Engineer's review resumes when the complete CQCP is resubmitted. Allow 1 working day for the second review or subsequent reviews by the Engineer.
4. When the Engineer approves the CQCP, submit 4 printed copies of the approved CQCP.

Do not start any work identified in the CQCP until the CQCP is approved. The start of construction (first working day) will not be delayed, nor will an extension of contract time (additional working days) be granted for any delay of work due to preparing and approving the CQCP.

The CQCP must be specific to this contract and address the following QC requirements:

1. Description of the QC organization, including a chart showing lines of authority.
2. Determine when corrective actions are needed if an area of work does not comply with these specifications.

3. Identify QC personnel, including the QC Manager, by name, qualifications, duties, responsibilities, and authorities. Provide an organizational chart showing all QC personnel and their assigned QC responsibilities.
4. Include a letter signed by an authorized official of the Contractor which describes the responsibilities of the QC Manager and delegates sufficient authority to the QC Manager to adequately perform the required duties, including authority to stop work that is not in compliance.
5. Procedures for scheduling, reviewing, certifying, and managing submittals including those of subcontractors, offsite fabricators, suppliers, and manufacturers.
6. Procedures for the quality inspection of the materials which includes contractor verification testing of materials to ensure it meets these specifications.
7. Control, verification, and manufacturing plant acceptance testing procedures for each specific test to ensure the quality of Contractor's workmanship. Include test name, reference specification requiring test, feature of work to be tested, test frequency, typical sample locations, required documentation, and person responsible for each test. Laboratory facilities must be properly certified and approved by the Engineer.
8. Identify the process to track preparatory, progress, and follow-up procedure phases.
9. Specify corrective actions, including verification testing, to be implemented upon identification of construction deficiency.
10. Reporting procedures including all proposed QC forms, daily QC reports, and other reporting formats.

6-2.02D(3) Procedure

6-2.02D(3)(a) General

Implement a minimum of three phases of QC for each definable feature of work (i.e. placing aggregate base, installing drainage pipe, pouring concrete sidewalk, compaction of subgrade…etc.).

6-2.02D(3)(b) Preparatory Phase

Prior to beginning each definable feature of work:

1. Review applicable plans and specifications.
2. Verify all materials and/or equipment have been tested, and approved.
3. Examine the work area to assure all required preceding work has been completed and is in compliance with these specifications.
4. Physically examine the required materials and equipment to assure they are on hand, conform to these specifications and shop drawings, and are properly stored/stockpiled.
5. Review testing standards and the procedures in the approved CQCP for this item of work.
6. Document construction tolerances and workmanship standards.
7. Request a pre-work conference with the Engineer, QC Manager and applicable QC personnel, and foreman responsible for this definable feature of work. Discuss methods of performing the production and installation work.
8. Instruct all applicable workers as to the acceptable level of workmanship required in order to meet these specifications.
9. Document the preparatory phase.

6-2.02D(3)(c) Progress Phase

During construction of each definable feature of work:

1. Verify adequacy of all QC measures.
2. Conduct required QC testing and inspection by QC personnel.
3. Analyze QC tests for compliance with these specifications.
4. Notify the Engineer of QC test results.
5. Implement CQCP corrective measures and repeat the above steps if QC test results do not meet these specifications.
6. Coordinate Engineer's QA testing if QC test results meet these specifications.
7. Document the progress phase.

6-2.02D(3)(d) Follow Up Phase

After each definable feature of work is completed and meets these specifications:

1. Perform daily visual checks on completed work to ensure the feature of work continues to be in compliance with these specifications.
2. Document visual checks in the CQCP.
3. Conduct final follow-up checks prior to the start of additional features of work that may be affected by the already completed work.
4. Implement corrective actions if completed work no longer complies with these specifications. Do not build upon or conceal non-conforming work.

6-2.02D(4) Testing

6-2.02D(4)(a) General

At a minimum, perform QC testing to the same standard and frequency required for the Engineer's QA testing. After receiving test results, remove or reconstruct any work performed that does not meet these specifications. Furnish split samples upon request by the Engineer for QA testing. Start and complete each test without delay. QA testing by the Engineer and payment for materials placed will not be authorized until the final CQCP test reports showing compliance with these specifications have been provided to the Engineer.

6-2.02D(4)(b) Certified Laboratory

Procure the services of an Engineer-approved certified testing laboratory or establish an approved laboratory testing facility at the project site.

Certified laboratories must follow FHWA and Caltrans certification procedures and be a participant in one or more of the following testing programs:

1. AASHTO Materials Reference Laboratory (AMRL)
2. Cement and Concrete Reference Laboratory (CCRL)
3. Caltrans' Reference Samples Program (RSP)

Certified laboratory personnel must be certified by one or more of the following:

1. Caltrans District Materials Engineer.
2. Nationally recognized non-Caltrans organizations such as the American Concrete Institute, Asphalt Institute, National Institute of Certification of Engineering Technologies, etc.
3. Other recognized organizations approved by the State of California and/or recognized by local governments or private associations.

The certified laboratory's equipment must be calibrated at least once each year, using an impartial means traceable to the National Institute of Standards and Technology. This is checked as part of the Independent Assurance Program.

6-2.02D(4)(c) Testing Procedure

Perform the following testing activities and provide documentation that all tests and related activities are completed:

1. Verify the testing procedures comply with these specifications.
2. Verify the facilities and testing equipment are available and comply with testing standards.
3. Check the test instrument calibration data against certified standards.
4. Prepare the recording forms and test identification control number system.
5. Document all passing and failing test results in the CQCP with the location of the test and the sequential control number identifying the test sample.
6. Provide a copy of tests performed to the Engineer.

Make available upon the Engineer's request the proposed laboratory and equipment to make verification and QA testing if the Engineer's material and testing laboratory does not have the required equipment.

6-2.02D(4)(d) Testing Standards

Laboratories utilized for testing soils must meet the criteria detailed in ASTM D 3740 or similar requirements for the Caltrans Laboratory Certification process. Whenever a reference is made in these specifications to any of the California Test numbers specified below, the corresponding ASTM Designation or AASHTO Designation test numbers may be used to determine the quality of materials.

CALIFORNIA TEST	ASTM DESIGNATION	AASHTO DESIGNATION
216	D 1557	T 180
231	D 2922 (a)	T 238 (a)
203	D 422	T 88
204	D 4318	T 89 & T 90
504	C 231	T 152
518	C 138	T 121
521	C 39	T 22
523	C 392 & C 78	T 177 & T 97
533	C 360	--
211	C 131 & C 535	T 96

Note:

(a) When ASTM Designation: D 2922 or AASHTO Designation: T 238 is used, the frequency and aerial distribution of such tests must comply with the requirements specified in California Test 231. For each determination of relative compaction by ASTM or AASHTO test methods, laboratory compaction tests per ASTM Designation: D 1557 or AASHTO Designation: T 180 must be performed, except when the use of previous laboratory maximum dry densities are allowed. Previous laboratory maximum dry densities may be used to determine relative compaction if the material, as determined by the Engineer, is from the same general excavation or plant source and has the same visual characteristics of color, gradation, and soil classification as the previous laboratory maximum dry densities. The use of previous laboratory maximum dry densities will not be permitted for more than 5 working days or for more than 14 determinations of relative compaction.

6-2.02D(4)(e) Failing Tests

Perform the following steps:

1. Record date, time, and location of the failing test in the CQCP and immediately notify the Engineer.
2. Consult the CQCP and implement remediation/corrective action.
3. Document the corrective action taken.
4. Retest the work after corrective action.
5. Record the result of the retest for compliance with these specifications. If the retest fails again, repeat with step 1.

6-2.02D(5) Reporting

No QA testing will be administered by the Engineer until test the reports are provided that verify compliance with these specifications.

1. Prepare and maintain a test location plan that will be included in the CQCP and provided to the Engineer upon request.
2. Document horizontal and vertical locations of all QC field tests and field sample locations to the nearest foot. Where possible, document all locations with respect to stationing on the project plans.
3. Label/Number all field tests using a sequential numbering system approved by the Engineer. Maintain a Materials Test Log summarizing all QC field and laboratory testing, including failed test results, and results of the QC test compared to the requirements of these specifications.

4. For failing test results, include a description of the corrective actions taken and the results of tests performed after the corrective action is taken in the Materials Test Log. The Material Test Log must be updated and maintained by the QC Manager and made available to the Engineer upon request. The Material Test Log will be attached to the approved CQCP.
5. Provide copies of each QC test result to the Engineer within 24 hours after collecting the laboratory test sample or initiating the field test, except on required test duration exceeding 24 hours. When the test duration exceeds 24 hours, distribution of final test results shall be within 24 hours after the completion of the test.

Submit a copy of the final Material Test Log to the Engineer upon substantial completion of the project.

For any single quality characteristic at a specific test location, if the QA test results administered by the Department do not comply with these specifications:

1. Stop production.
2. Take corrective action per the CQCP.
3. Perform QC testing to verify compliance with these specifications
4. Provide the test results to Engineer. Request 2nd QA test if QC tests verify compliance with these specifications.
5. In the Engineer's presence, take samples and split each sample into 4 parts. Your QC laboratory would receive 2 parts for additional testing if necessary. The Engineer tests 1 part for QA compliance with these specifications and reserves and stores 1 part.
6. Demonstrate QA compliance with these specifications, otherwise repeat this process until compliance is achieved.

6-2.02D(6) Penalties

If in the Engineer's opinion you do not comply with or follow your approved CQCP, stop all work and replace your QC Manager. The counting of working days will continue while you identify a new QC manager.

Beginning with the 2nd QA test for any single quality characteristic at a specific test location, the Department will deduct all associated testing lab costs for additional QA tests from moneys due or that may become due to you under the contract.

The Engineer will deduct the final payment of CQCP from the contract if you fail to comply with the approved CQCP or provide all test results and a copy of the final Material Test Log.

6-2.02D(7) Payment

After the Engineer approves the CQCP, the Department pays 25 percent of the bid item price for Contractor Quality Control Plan.

The Department does not adjust the payment of the CQCP for an increase or decrease in the quantity of QC tests, including additional testing due to the Contractor, subcontractor, supplier, manufacturer, or fabricator's own construction deficiencies.

Section 9-1.06, "Changed Quantity Payment Adjustments," does not apply.

^^

7 LEGAL RELATIONS AND RESPONSIBILITY TO THE PUBLIC

Add to section 7-1.02A:

The contractor shall not discriminate on the basis of race, color, national origin or sex in the performance of this contract. The contractor shall carry out applicable requirements of 40 CFR part 33 in the award and administration of contracts awarded under EPA financial assistance agreements. Failure by the contractor to carry out these requirements is a material breach of this contract which may result in the termination of this contract or other legally available remedies.

Replace section 7-1.02D with:

7-1.02D Davis-Bacon Act

The following provisions apply to this contract:

(a) **Davis-Bacon Act**, as amended (40 U.S.C. 3141-3148). The contractor shall comply with the Davis-Bacon Act (40 U.S.C. 3141-3144 and 3146-3148), as supplemented by Department of Labor regulations (29 CFR Part 5, "Labor Standard Provisions Applicable to Contracts Covering Federally Financed and Assisted Construction").

(1) Minimum wages.

(i) All laborers and mechanics employed or working upon the site of the work (or under the United States Housing Act of 1937 or under the Housing Act of 1949 in the construction or development of the project), will be paid unconditionally and not less often than once a week, and without subsequent deduction or rebate on any account (except such payroll deductions as are permitted by regulations issued by the Secretary of Labor under the Copeland Act (29 CFR part 3)), the full amount of wages and bona fide fringe benefits (or cash equivalents thereof) due at time of payment computed at rates not less than those contained in the wage determination of the Secretary of Labor which is attached hereto and made a part hereof, regardless of any contractual relationship which may be alleged to exist between Contractor and such laborers and mechanics. Contributions made or costs reasonably anticipated for bona fide fringe benefits under section 1(b)(2) of the Davis-Bacon Act on behalf of laborers or mechanics are considered wages paid to such laborers or mechanics, subject to the provisions of paragraph (a)(1)(iv) of this section; also, regular contributions made or costs incurred for more than a weekly period (but not less often than quarterly) under plans, funds, or programs which cover the particular weekly period, are deemed to be constructively made or incurred during such weekly period. Such laborers and mechanics shall be paid the appropriate wage rate and fringe benefits on the wage determination for the classification of work actually performed, without regard to skill, except as provided in § 5.5(a)(4). Laborers or mechanics performing work in more than one classification may be compensated at the rate specified for each classification for the time actually worked therein: Provided, That the employer's payroll records accurately set forth the time spent in each classification in which work is performed. The wage determination (including any additional classification and wage rates conformed under paragraph (a)(1)(ii) of this section) and the Davis-Bacon poster (WH-1321) shall be posted at all times by Contractor and its subcontractors at the site of the work in a prominent and accessible place where it can be easily seen by the workers.

(ii)

(A) The contracting officer shall require that any class of laborers or mechanics, including helpers, which is not listed in the wage determination and which is to be employed under the contract shall be classified in conformance with the wage determination. The contracting officer shall approve an additional classification and wage rate and fringe benefits therefore only when the following criteria have been met:

(1) The work to be performed by the classification requested is not performed by a classification in the wage determination; and

(2) The classification is utilized in the area by the construction industry; and

(3) The proposed wage rate, including any bona fide fringe benefits, bears a reasonable relationship to the wage rates contained in the wage determination.

(B) If the contractor and the laborers and mechanics to be employed in the classification (if known), or their representatives, and the contracting officer agree on the classification and wage rate (including the amount designated for fringe benefits where appropriate), a report of the action taken shall be sent by the contracting officer to the Administrator of

the Wage and Hour Division, Employment Standards Administration, U.S. Department of Labor, Washington, DC 20210. The Administrator, or an authorized representative, will approve, modify, or disapprove every additional classification action within 30 days of receipt and so advise the contracting officer or will notify the contracting officer within the 30-day period that additional time is necessary.

(C) In the event the contractor, the laborers or mechanics to be employed in the classification or their representatives, and the contracting officer do not agree on the proposed classification and wage rate (including the amount designated for fringe benefits, where appropriate), the contracting officer shall refer the questions, including the views of all interested parties and the recommendation of the contracting officer, to the Administrator for determination. The Administrator, or an authorized representative, will issue a determination within 30 days of receipt and so advise the contracting officer or will notify the contracting officer within the 30-day period that additional time is necessary.

(D) The wage rate (including fringe benefits where appropriate) determined pursuant to paragraphs (a)(1)(ii) (B) or (C) of this section, shall be paid to all workers performing work in the classification under this contract from the first day on which work is performed in the classification.

(iii) Whenever the minimum wage rate prescribed in the contract for a class of laborers or mechanics includes a fringe benefit which is not expressed as an hourly rate, the contractor shall either pay the benefit as stated in the wage determination or shall pay another bona fide fringe benefit or an hourly cash equivalent thereof.

(iv) If the contractor does not make payments to a trustee or other third person, the contractor may consider as part of the wages of any laborer or mechanic the amount of any costs reasonably anticipated in providing bona fide fringe benefits under a plan or program, *Provided,* That the Secretary of Labor has found, upon the written request of the contractor, that the applicable standards of the Davis-Bacon Act have been met. The Secretary of Labor may require Contractor to set aside in a separate account assets for the meeting of obligations under the plan or program.

***(2) Withholding*.** The U.S. Environmental Protection Agency (EPA) shall upon its own action or upon written request of an authorized representative of the Department of Labor withhold or cause to be withheld from the contractor under this contract or any other Federal contract with the same prime contractor, or any other federally-assisted contract subject to Davis-Bacon prevailing wage requirements, which is held by the same prime contractor, so much of the accrued payments or advances as may be considered necessary to pay laborers and mechanics, including apprentices, trainees, and helpers, employed by the contractor or any subcontractor the full amount of wages required by the contract. In the event of failure to pay any laborer or mechanic, including any apprentice, trainee, or helper, employed or working on the site of the work (or under the United States Housing Act of 1937 or under the Housing Act of 1949 in the construction or development of the project), all or part of the wages required by the contract, the (Agency) may, after written notice to Contractor, sponsor, applicant, or owner, take such action as may be necessary to cause the suspension of any further payment, advance, or guarantee of funds until such violations have ceased.

(3) Payrolls and basic records.

(i) Payrolls and basic records relating thereto shall be maintained by the contractor during the course of the work and preserved for a period of three years thereafter for all laborers and mechanics working at the site of the work (or under the United States Housing Act of 1937, or under the Housing Act of 1949, in the construction or development of the project). Such records shall contain the name, address, and social security number of each such worker, his or her correct classification, hourly rates of wages paid (including rates of contributions or costs anticipated for bona fide fringe benefits or cash equivalents thereof of the types described in section 1(b)(2)(B) of the Davis-Bacon Act), daily and weekly number of hours

worked, deductions made and actual wages paid. Whenever the Secretary of Labor has found under 29 CFR 5.5(a)(1)(iv) that the wages of any laborer or mechanic include the amount of any costs reasonably anticipated in providing benefits under a plan or program described in section 1(b)(2)(B) of the Davis-Bacon Act, the contractor shall maintain records which show that the commitment to provide such benefits is enforceable, that the plan or program is financially responsible, and that the plan or program has been communicated in writing to the laborers or mechanics affected, and records which show the costs anticipated or the actual cost incurred in providing such benefits. Contractors employing apprentices or trainees under approved programs shall maintain written evidence of the registration of apprenticeship programs and certification of trainee programs, the registration of the apprentices and trainees, and the ratios and wage rates prescribed in the applicable programs.

(ii)

(A) The contractor shall submit weekly for each week in which any contract work is performed a copy of all payrolls to the EPA if the agency is a party to the contract, but if the agency is not such a party, the contractor will submit the payrolls to the applicant, sponsor, or owner, as the case may be, for transmission to the EPA. The payrolls submitted shall set out accurately and completely all of the information required to be maintained under 29 CFR 5.5(a)(3)(i), except that full social security numbers and home addresses shall not be included on weekly transmittals. Instead the payrolls shall only need to include an individually identifying number for each employee (e.g., the last four digits of the employee's social security number). The required weekly payroll information may be submitted in any form desired. Optional Form WH-347 is available for this purpose from the Wage and Hour Division Web site at *http://www.dol.gov/esa/whd/forms/wh347instr.htm* or its successor site. The prime contractor is responsible for the submission of copies of payrolls by all subcontractors. Contractors and subcontractors shall maintain the full social security number and current address of each covered worker, and shall provide them upon request to the EPA if the agency is a party to the contract, but if the agency is not such a party, the contractor will submit them to the applicant, sponsor, or owner, as the case may be, for transmission to the EPA, the contractor, or the Wage and Hour Division of the Department of Labor for purposes of an investigation or audit of compliance with prevailing wage requirements. It is not a violation of this section for a prime contractor to require a subcontractor to provide addresses and social security numbers to the prime contractor for its own records, without weekly submission to the sponsoring government agency (or the applicant, sponsor, or owner).

(B) Each payroll submitted shall be accompanied by a “Statement of Compliance,” signed by the contractor or subcontractor or his or her agent who pays or supervises the payment of the persons employed under the contract and shall certify the following:

(1) That the payroll for the payroll period contains the information required to be provided under § 5.5 (a)(3)(ii) of Regulations, 29 CFR part 5, the appropriate information is being maintained under § 5.5 (a)(3)(i) of Regulations, 29 CFR part 5, and that such information is correct and complete;

(2) That each laborer or mechanic (including each helper, apprentice, and trainee) employed on the contract during the payroll period has been paid the full weekly wages earned, without rebate, either directly or indirectly, and that no deductions have been made either directly or indirectly from the full wages earned, other than permissible deductions as set forth in Regulations, 29 CFR part 3;

(3) That each laborer or mechanic has been paid not less than the applicable wage rates and fringe benefits or cash equivalents for the classification of work performed, as specified in the applicable wage determination incorporated into the contract.

(C) The weekly submission of a properly executed certification set forth on the reverse side of Optional Form WH-347 shall satisfy the requirement for submission of the "Statement of Compliance" required by paragraph (a)(3)(ii)(B) of this section.

(D) The falsification of any of the above certifications may subject Contractor or subcontractor to civil or criminal prosecution under section 1001 of title 18 and section 231 of title 31 of the United States Code.

(iii) The contractor or subcontractor shall make the records required under paragraph (a)(3)(i) of this section available for inspection, copying, or transcription by authorized representatives of the EPA or the Department of Labor, and shall permit such representatives to interview employees during working hours on the job. If the contractor or subcontractor fails to submit the required records or to make them available, after written notice to the contractor, EPA, may, after written notice to the contractor, sponsor, applicant, or owner, take such action as may be necessary to cause the suspension of any further payment, advance, or guarantee of funds. Furthermore, failure to submit the required records upon request or to make such records available may be grounds for debarment action pursuant to 29 CFR 5.12.

(4) Apprentices and trainees.

(i) ***Apprentices*****.** Apprentices will be permitted to work at less than the predetermined rate for the work they performed when they are employed pursuant to and individually registered in a bona fide apprenticeship program registered with the U.S. Department of Labor, Employment and Training Administration, Office of Apprenticeship Training, Employer and Labor Services, or with a State Apprenticeship Agency recognized by the Office, or if a person is employed in his or her first 90 days of probationary employment as an apprentice in such an apprenticeship program, who is not individually registered in the program, but who has been certified by the Office of Apprenticeship Training, Employer and Labor Services or a State Apprenticeship Agency (where appropriate) to be eligible for probationary employment as an apprentice. The allowable ratio of apprentices to journeymen on the job site in any craft classification shall not be greater than the ratio permitted to the contractor as to the entire work force under the registered program. Any worker listed on a payroll at an apprentice wage rate, who is not registered or otherwise employed as stated above, shall be paid not less than the applicable wage rate on the wage determination for the classification of work actually performed. In addition, any apprentice performing work on the job site in excess of the ratio permitted under the registered program shall be paid not less than the applicable wage rate on the wage determination for the work actually performed. Where a contractor is performing construction on a project in a locality other than that in which its program is registered, the ratios and wage rates (expressed in percentages of the journeyman's hourly rate) specified in the contractor's or subcontractor's registered program shall be observed. Every apprentice must be paid at not less than the rate specified in the registered program for the apprentice's level of progress, expressed as a percentage of the journeymen hourly rate specified in the applicable wage determination. Apprentices shall be paid fringe benefits in accordance with the provisions of the apprenticeship program. If the apprenticeship program does not specify fringe benefits, apprentices must be paid the full amount of fringe benefits listed on the wage determination for the applicable classification. If the Administrator determines that a different practice prevails for the applicable apprentice classification, fringes shall be paid in accordance with that determination. In the event the Office of Apprenticeship Training, Employer and Labor Services, or a State Apprenticeship Agency recognized by the Office, withdraws approval of an apprenticeship program, the contractor will no longer be permitted to utilize apprentices at less than the applicable predetermined rate for the work performed until an acceptable program is approved.

(ii) ***Trainees.*** Except as provided in 29 CFR 5.16, trainees will not be permitted to work at less than the predetermined rate for the work performed unless they are employed pursuant to and individually registered in a program which has received prior approval, evidenced by formal certification by the U.S. Department of Labor, Employment and Training Administration. The ratio of trainees to journeymen on the job site shall not be greater than permitted under the plan approved by the Employment and Training Administration. Every

trainee must be paid at not less than the rate specified in the approved program for the trainee's level of progress, expressed as a percentage of the journeyman hourly rate specified in the applicable wage determination. Trainees shall be paid fringe benefits in accordance with the provisions of the trainee program. If the trainee program does not mention fringe benefits, trainees shall be paid the full amount of fringe benefits listed on the wage determination unless the Administrator of the Wage and Hour Division determines that there is an apprenticeship program associated with the corresponding journeyman wage rate on the wage determination which provides for less than full fringe benefits for apprentices. Any employee listed on the payroll at a trainee rate who is not registered and participating in a training plan approved by the Employment and Training Administration shall be paid not less than the applicable wage rate on the wage determination for the classification of work actually performed. In addition, any trainee performing work on the job site in excess of the ratio permitted under the registered program shall be paid not less than the applicable wage rate on the wage determination for the work actually performed. In the event the Employment and Training Administration withdraws approval of a training program, the contractor will no longer be permitted to utilize trainees at less than the applicable predetermined rate for the work performed until an acceptable program is approved.

(iii) ***Equal employment opportunity.*** The utilization of apprentices, trainees and journeymen under this part shall be in conformity with the equal employment opportunity requirements of Executive Order 11246, as amended, and 29 CFR part 30.

(5) ***Compliance with Copeland Act requirements*****.** Contractor shall comply with the requirements of 29 CFR part 3, which are incorporated by reference in this contract.

(6) ***Subcontracts.*** Contractor or subcontractor shall insert in any subcontracts the clauses contained in 29 CFR 5.5(a)(1) through (10) and such other clauses as the EPA may by appropriate instructions require, and also a clause requiring the subcontractors to include these clauses in any lower tier subcontracts. The prime contractor shall be responsible for the compliance by any subcontractor or lower tier subcontractor with all the contract clauses of 29 CFR 5.5.

(7) ***Contract termination: debarment****.* A breach of the contract clauses in 29 CFR 5.5 may be grounds for termination of the contract, and for debarment as a contractor and a subcontractor as provided in 29 CFR 5.12.

(8) ***Compliance with Davis-Bacon and Related Act requirements***. All rulings and interpretations of the Davis-Bacon and Related Acts contained in 29 CFR parts 1, 3, and 5 are herein incorporated by reference in this contract.

(9) ***Disputes concerning labor standards*****.** Disputes arising out of the labor standards provisions of this contract shall not be subject to the general disputes clause of this contract. Such disputes shall be resolved in accordance with the procedures of the Department of Labor set forth in 29 CFR parts 5, 6, and 7. Disputes within the meaning of this clause include disputes between the contractor (or any of its subcontractors) and the contracting agency, the U.S. Department of Labor, or the employees or their representatives.

(10) ***Certification of eligibility*****.**

(i) By entering into this contract, the contractor certifies that neither it (nor he or she) nor any person or firm who has an interest in the contractor's firm is a person or firm ineligible to be awarded Government contracts by virtue of section 3(a) of the Davis-Bacon Act or 29 CFR 5.12(a)(1).

(ii) No part of this contract shall be subcontracted to any person or firm ineligible for award of a Government contract by virtue of section 3(a) of the Davis-Bacon Act or 29 CFR 5.12(a)(1). The penalty for making false statements is prescribed in the U.S. Criminal Code, 18 U.S.C. 1001.

(iii) The penalty for making false statements is prescribed in the U.S. Criminal Code, 18 U.S.C. 1001.

Replace section 7-1.02E with:

7-1.02E Contract Work Hours and Safety Standards Act (40 U.S.C. 3701-3708)

The contractor shall comply with 40 U.S.C. 3702 and 3704, as supplemented by Department of Labor regulations (29 CFR Part 5).

(1) Overtime requirements. No contractor or subcontractor contracting for any part of the contract work which may require or involve the employment of laborers or mechanics shall require or permit any such laborer or mechanic in any workweek in which he or she is employed on such work to work in excess of forty hours in such workweek unless such laborer or mechanic receives compensation at a rate not less than one and one-half times the basic rate of pay for all hours worked in excess of forty hours in such workweek.

(2) Violation; liability for unpaid wages; liquidated damages. In the event of any violation of the clause set forth in paragraph (1) of this section the contractor and any subcontractor responsible therefor shall be liable for the unpaid wages. In addition, such contractor and subcontractor shall be liable to the United States (in the case of work done under contract for the District of Columbia or a territory, to such District or to such territory), for liquidated damages. Such liquidated damages shall be computed with respect to each individual laborer or mechanic, including watchmen and guards, employed in violation of the clause set forth in paragraph (1) of this section, in the sum of $27 for each calendar day on which such individual was required or permitted to work in excess of the standard workweek of forty hours without payment of the overtime wages required by the clause set forth in paragraph (1) of this section.

(3) Withholding for unpaid wages and liquidated damages**.** The EPA shall upon its own action or upon written request of an authorized representative of the Department of Labor withhold or cause to be withheld, from any moneys payable on account of work performed by Contractor or subcontractor under any such contract or any other Federal contract with the same prime contractor, or any other federally-assisted contract subject to the Contract Work Hours and Safety Standards Act, which is held by the same prime contractor, such sums as may be determined to be necessary to satisfy any liabilities of such contractor or subcontractor for unpaid wages and liquidated damages as provided in the clause set forth in paragraph (2) of this section.

(4) Subcontracts. The contractor or subcontractor shall insert in any subcontracts the clauses set forth in this section and also a clause requiring the subcontractors to include these clauses in any lower tier subcontracts. The prime contractor shall be responsible for compliance by any subcontractor or lower tier subcontractor with these clauses.

Replace section 7-1.02F with:

7-1.02F Clean Air Act and the Federal Water Pollution Control Act

The contractor and its subcontractors must comply with all applicable standards, orders or regulations issued pursuant to the Clean Air Act (42 U.S.C. 7401-7671q) and the Federal Water Pollution Control Act as amended (33 U.S.C. 1251-1387).

Violations must be reported to the EPA and the Regional Office of the EPA.

Replace section 7-1.02G with:

7-1.02G Equal Opportunity Clause (41 CFR §60-1.4)

During the performance of this contract, the contractor agrees as follows:

(1) The contractor will not discriminate against any employee or applicant for employment because of race, color, religion, sex, sexual orientation, gender identity, or national origin. The contractor will take affirmative action to ensure that applicants are employed, and that employees are treated during employment without regard to their race, color, religion, sex, sexual orientation, gender identity, or national origin. Such action shall include, but not be limited to the following: Employment, upgrading, demotion, or transfer; recruitment or recruitment advertising; layoff or termination; rates of pay or other forms of compensation; and selection for training, including apprenticeship. The contractor agrees to post in conspicuous places, available to employees and applicants for employment, notices to be provided setting forth the provisions of this nondiscrimination clause.

(2) The contractor will, in all solicitations or advertisements for employees placed by or on behalf of the contractor, state that all qualified applicants will receive consideration for employment without regard to race, color, religion, sex, sexual orientation, gender identity, or national origin.

(3) The contractor will not discharge or in any other manner discriminate against any employee or applicant for employment because such employee or applicant has inquired about, discussed, or disclosed the compensation of the employee or applicant or another employee or applicant. This provision shall not apply to instances in which an employee who has access to the compensation information of other employees or applicants as a part of such employee's essential job functions discloses the compensation of such other employees or applicants to individuals who do not otherwise have access to such information, unless such disclosure is in response to a formal complaint or charge, in furtherance of an investigation, proceeding, hearing, or action, including an investigation conducted by the employer, or is consistent with the contractor's legal duty to furnish information.

(4) The contractor will send to each labor union or representative of workers with which he has a collective bargaining agreement or other contract or understanding, a notice to be provided advising the said labor union or workers' representatives of the contractor's commitments under this section, and shall post copies of the notice in conspicuous places available to employees and applicants for employment.

(5) The contractor will comply with all provisions of Executive Order 11246 of September 24, 1965, and of the rules, regulations, and relevant orders of the Secretary of Labor.

(6) The contractor will furnish all information and reports required by Executive Order 11246 of September 24, 1965, and by rules, regulations, and orders of the Secretary of Labor, or pursuant thereto, and will permit access to his books, records, and accounts by the administering agency and the Secretary of Labor for purposes of investigation to ascertain compliance with such rules, regulations, and orders.

(7) In the event of the contractor's noncompliance with the nondiscrimination clauses of this contract or with any of the said rules, regulations, or orders, this contract may be canceled, terminated, or suspended in whole or in part and the contractor may be declared ineligible for further Government contracts or federally assisted construction contracts in accordance with procedures authorized in Executive Order 11246 of September 24, 1965, and such other sanctions may be imposed and remedies invoked as provided in Executive Order 11246 of September 24, 1965, or by rule, regulation, or order of the Secretary of Labor, or as otherwise provided by law.

(8) The contractor will include the portion of the sentence immediately preceding paragraph (1) and the provisions of paragraphs (1) through (8) in every subcontract or purchase order unless exempted by rules, regulations, or orders of the Secretary of Labor issued pursuant to section 204 of Executive Order 11246 of September 24, 1965, so that such provisions will be binding upon each subcontractor or vendor. The contractor will take such action with respect to any subcontract or purchase order as the administering agency may direct as a means of enforcing such provisions, including sanctions for noncompliance: *Provided*, however, that in

the event a contractor becomes involved in, or is threatened with, litigation with a subcontractor or vendor as a result of such direction by the administering agency, the contractor may request the United States to enter into such litigation to protect the interests of the United States.

Replace section 7-1.02D with:

7-1.02D Texting When Driving

In accordance with Executive Order 13513, “Federal Leadership on Reducing Text Messaging While Driving” (10/1/2009) and DOT Order 3902.10, “Text Messaging While Driving” (12/30/2009), Contractors and subcontractors are encouraged to:

1. Adopt and enforce workplace safety policies to decrease crashes caused by distracted drivers including policies to ban text messaging while driving when performing any work for, or on behalf of, the Agency.
2. Conduct workplace safety initiatives in a manner commensurate with the size of the business, such as:
    a. Establishment of new rules and programs or re-evaluation of existing programs to prohibit text messaging while driving; and
    b. Education, awareness, and other outreach to employees about the safety risks associated with texting while driving.

Insert the substance of this clause, including this paragraph, in all subcontracts to perform work under this contract.

Add to the end of section 7-1.02I(2):

The following specifications are applicable to this contract:

1. During the performance of this contract, contractor and its subcontractors shall not unlawfully discriminate, harass, allow harassment against any employee or applicant for employment or deny benefits to any person because of sex, race, color, ancestry, religious creed, national origin, physical disability (including HIV and AIDS), mental disability, medical condition (cancer), genetic information, age (over 40), marital status, gender, gender identity, gender expression, sexual orientation, military and veteran status, denial of pregnancy disability leave or reasonable accommodation, and denial of family and medical care leave. Contractor and subcontractors shall ensure that the evaluation and treatment of their employees and applicants for employment are free from such discrimination and harassment.
2. Contractor and its subcontractors shall comply with the provisions of the Fair Employment and Housing Act (California Government Code Section 12990 (a-f) et seq.), the applicable regulations promulgated thereunder (California Code of Regulations, Title 2, Section 11000 et seq.), the provisions of Article 9.5, Chapter 1, Part 1, Division 3, Title 2 of the California Government Code (Gov. Code §11135-11139.5), and the regulations or standards adopted by the State Coastal Conservancy to implement such article. The applicable regulations of the Fair Employment and Housing Commission implementing California Government Code Section 12990 (a-f), set forth in Chapter 5 of division 4 of Title 2 of the California Code of Regulations, are incorporated into this contract by reference and made a part hereof as if set forth in full.
3. Contractor and its subcontractors shall give written notice of their obligations under this clause to labor organizations with which they have a collective bargaining or other agreement.

Replace Section 7-1.02J with:

7-1.02J PROJECT LABOR AGREEMENT

If your bid is greater than or equal to one million dollars ($1,000,000), then as a condition of being awarded the contract, you will be required to sign a project labor agreement ("PLA") (sample is attached to the Proposal and Contract) with the Contra Costa Building and Construction Trades Council and various craft unions.

The PLA must be entered into within 14 calendar days after the County or its representative has provided notification that you are the apparent lowest responsible bidder. All subcontractors, as a condition of working on the project, will be required to sign the PLA. You must obtain all required signatures for execution of the PLA in cooperation with the Contra Costa Building and Construction Trades Council. Contact Mr. William S. Whitney, Chief Executive Officer, at (925) 228-0900 to coordinate execution of the PLA.

Add to section 7-1.02K(1):

Pursuant to California Labor Code section 1773, the Director of the Department of Industrial Relations has ascertained the general prevailing rates of wages per diem, and for holiday and overtime work, in the locality in which the Project work is to be performed for each craft, classification, or type of worker needed to execute the Project work. Contractor shall pay, and require all subcontractors to pay, at least these prevailing wage rates to all persons on the Project work.

Add to section 7-1.02K(3):

Permit the Engineer to interview employees during working hours on the job to verify the certified payroll records.

Add to section 7-1.02K(6)(b):

Comply with Public Contract Code § 7104, as shown below, while excavating.

§ 7104. Any public works contract of a local public entity which involves digging trenches or other excavations that extend deeper than four feet below the surface shall contain a clause which provides the following:

(a) That the contractor shall promptly, and before the following conditions are disturbed, notify the local public entity, in writing, of any:

> *(1) Material that the contractor believes may be material that is hazardous waste, as defined in Section 25117 of the Health and Safety Code, that is required to be removed to a Class I, Class II, or Class III disposal site in accordance with provisions of existing law.*
>
> *(2) Subsurface or latent physical conditions at the site differing from those indicated by information about the site made available to bidders prior to the deadline for submitting bids.*
>
> *(3) Unknown physical conditions at the site of any unusual nature, different materially from those ordinarily encountered and generally recognized as inherent in work of the character provided for in the contract.*

(b) That the local public entity shall promptly investigate the conditions, and if it finds that the conditions do materially so differ, or do involve hazardous waste, and cause a decrease or increase in the contractor's cost of, or the time required for, performance of any part of the work shall issue a change order under the procedures described in the contract.

(c) That, in the event that a dispute arises between the local public entity and the contractor whether the conditions materially differ, or involve hazardous waste, or cause a decrease or increase in the contractor's cost of, or time required for, performance of any part of the work, the contractor shall not be excused from any scheduled completion date provided for by the contract, but shall proceed with all work to be performed under the contract. The contractor shall retain any and all rights provided either by contract or by law which pertain to the resolution of disputes and protests between the contracting parties.

Replace *65 days* in the 4th paragraph of section 7-1.02K(6)(b) with:

30 days

Add to section 7-1.02K(6)(b):

Designate a competent person to be on site at all times while trench excavation work is being performed. The competent person must be certified and make daily inspection in accordance with all OSHA requirements. A competent person means one who is capable of identifying existing and predictable hazards in the surroundings or working conditions which are unsanitary, hazardous, or dangerous to employees, and who has the authorization to take prompt corrective measures to eliminate them.

Trench shoring and protection is measured along the trench centerline where the trench protection work is actually performed, and only where trenches are five feet or greater in depth or it has been determined by the competent person and approved by the Engineer that trench shoring is required.

Replace the 22nd and 23rd paragraphs of section 7-1.04 with:

Install temporary railing (Type K) between a lane open to public traffic and an excavation, obstacle, or storage area when the following conditions exist:

(1) Excavations.--Any excavation, the near edge of which is 12 feet or less from the edge of the lane, except:

   (a) Excavations covered with sheet steel or concrete covers of adequate thickness to prevent accidental entry by traffic or the public. Trench plates subject to public traffic must be the non-skid type (coefficient of friction of 0.35 or higher) and chocked. If more than one plate is required, the plates must be tack welded together. Plates greater than 0.15 feet thick, placed within any paved portion of the roadway, including shoulders, must have a temporary HMA taper at a slope of 20:1 (horizontal:vertical) from the top of plate to all paved surfaces. Plates placed entirely outside existing pavement must be properly delineated in a manner subject to the approval of the Engineer.

   (b) Excavations less than one foot in diameter a minimum of 5 feet from edge of travel way to the nearest edge of excavation.

   (c) Excavations parallel to the lane for the purpose of pavement widening or reconstruction.

   (d) Excavations in side slopes, where the slope is steeper than 4:1.

   (e) Excavations protected by existing barrier or railing.

(2) Temporarily Unprotected Permanent Obstacles.—Whenever the work includes the installation of a fixed obstacle together with a protective system, such as a sign structure together with protective railing, and you elect to install the obstacle prior to installing the protective system; or whenever you, for your convenience and with permission of the Engineer, remove a portion of an existing protective railing at an obstacle and do not replace such railing complete in place during the same day.

(3) Storage Areas.—Whenever material or equipment is stored within 12 feet of the lane and such storage is not otherwise prohibited by the Standard Specifications and these special provisions.

At the end of each working day if a difference in excess of 0.15 feet exists between the elevation of the existing pavement and the elevation of excavations within 12 feet of the traveled way, material must be placed and compacted against the vertical cuts adjacent to the traveled way. During excavation operations, native material may be used for this purpose; however, once placing of the structural section commences, structural material must be used. The material must be placed to the level of the elevation of the top of existing pavement and tapered at a slope of 4:1 (horizontal:vertical) or flatter to the bottom of the excavation. Treated base may not be used for the taper. Full compensation for placing the material on a 4:1 slope, regardless of the number of times the material is required, and subsequent removing or reshaping of the material to the lines and grades shown on the plans is considered as included in the contract price paid for the materials involved and no additional compensation will be allowed therefor. No payment will be made for material placed in excess of that required for the structural section.

Replace section 7-1.05 with:

Comply with the indemnification requirements in section 20, “Hold Harmless and Indemnification,” of the Contra Costa County Standard Form Construction Agreement. A sample of this agreement is included in the Proposal.

Add to section 7-1.06D(2):

Name the following agencies/entities as additional insured and defend, hold harmless, and indemnify:

1. Contra Costa County Flood Control and Water Conservation District
2. City of Brentwood
3. East Bay Regional Park District
4. American Rivers
5. California Department of Water Resources
6. Sacramento-San Joaquin Delta Conservancy
7. California Coastal Conservancy
8. United States Environmental Protection Agency
9. California Natural Resources Agency
10. DLT Ventures, LLC

Name the following list of property owners and occupants of the real property located at the following addresses as additional insured and defend, hold harmless, and indemnify:

Assessor Parcel No.	Name of Owner	Site Address
017-110-011	Leland D Hancock and H. Douglas Hancock	760 Minnesota Avenue Brentwood, CA
017-670-040	Carmel Estates Owners Association	2800 West March Lane, Suite 210 Stockton, CA 95219

Replace *Ten days* in the 1st paragraph of section 7-1.06H with:

Thirty days

Replace the 1st paragraph of section 7-1.06I with:

A self-insurance program will only be allowed for worker’s compensation insurance. No other self-insurance programs will be allowed for the other types of required insurance. Furnish 2 copies of their certificate to consent to self-insure issued by the Director of Industrial Relations of the State of California.

Delete the second paragraph of section 7-1.11A.

Replace section 7-1.11B with:

Reserved

Replace section 7-1.11D with:

7-1.11D Apprentices and Trainees

Apprentices will be permitted to work at less than the predetermined rate for the work they performed when they are employed pursuant to and individually registered in a bona fide apprenticeship program

registered with the U.S. Department of Labor, Employment and Training Administration, Office of Apprenticeship Training, Employer and Labor Services, or with a State Apprenticeship Agency recognized by the Office, or if a person is employed in his or her first 90 days of probationary employment as an apprentice in such an apprenticeship program, who is not individually registered in the program, but who has been certified by the Office of Apprenticeship Training, Employer and Labor Services or a State Apprenticeship Agency (where appropriate) to be eligible for probationary employment as an apprentice. The allowable ratio of apprentices to journeymen on the job site in any craft classification shall not be greater than the ratio permitted to the contractor as to the entire work force under the registered program. Any worker listed on a payroll at an apprentice wage rate, who is not registered or otherwise employed as stated above, shall be paid not less than the applicable wage rate on the wage determination for the classification of work actually performed. In addition, any apprentice performing work on the job site in excess of the ratio permitted under the registered program shall be paid not less than the applicable wage rate on the wage determination for the work actually performed. Where a contractor is performing construction on a project in a locality other than that in which its program is registered, the ratios and wage rates (expressed in percentages of the journeyman's hourly rate) specified in the contractor's or subcontractor's registered program shall be observed. Every apprentice must be paid at not less than the rate specified in the registered program for the apprentice's level of progress, expressed as a percentage of the journeymen hourly rate specified in the applicable wage determination. Apprentices shall be paid fringe benefits in accordance with the provisions of the apprenticeship program. If the apprenticeship program does not specify fringe benefits, apprentices must be paid the full amount of fringe benefits listed on the wage determination for the applicable classification. If the Administrator determines that a different practice prevails for the applicable apprentice classification, fringes shall be paid in accordance with that determination. In the event the Office of Apprenticeship Training, Employer and Labor Services, or a State Apprenticeship Agency recognized by the Office, withdraws approval of an apprenticeship program, the contractor will no longer be permitted to utilize apprentices at less than the applicable predetermined rate for the work performed until an acceptable program is approved.

Except as provided in 29 CFR 5.16, trainees will not be permitted to work at less than the predetermined rate for the work performed unless they are employed pursuant to and individually registered in a program which has received prior approval, evidenced by formal certification by the U.S. Department of Labor, Employment and Training Administration. The ratio of trainees to journeymen on the job site shall not be greater than permitted under the plan approved by the Employment and Training Administration. Every trainee must be paid at not less than the rate specified in the approved program for the trainee's level of progress, expressed as a percentage of the journeyman hourly rate specified in the applicable wage determination. Trainees shall be paid fringe benefits in accordance with the provisions of the trainee program. If the trainee program does not mention fringe benefits, trainees shall be paid the full amount of fringe benefits listed on the wage determination unless the Administrator of the Wage and Hour Division determines that there is an apprenticeship program associated with the corresponding journeyman wage rate on the wage determination which provides for less than full fringe benefits for apprentices. Any employee listed on the payroll at a trainee rate who is not registered and participating in a training plan approved by the Employment and Training Administration shall be paid not less than the applicable wage rate on the wage determination for the classification of work actually performed. In addition, any trainee performing work on the job site in excess of the ratio permitted under the registered program shall be paid not less than the applicable wage rate on the wage determination for the work actually performed. In the event the Employment and Training Administration withdraws approval of a training program, the contractor will no longer be permitted to utilize trainees at less than the applicable predetermined rate for the work performed until an acceptable program is approved.

The utilization of apprentices, trainees and journeymen under this part shall be in conformity with the equal employment opportunity requirements of Executive Order 11246, as amended, and 29 CFR part 30.

Add to section 7-1.11:

7-1.11E Cargo Preference Act of 1954

Section 7-1.11E applies to a federal-aid contract.

Under 46 CFR 381.7(b):

Use of United States-flag vessels: The contractor agrees –

1) To utilize privately owned United States-flag commercial vessels to ship at least 50 percent of the gross tonnage (computed separately for dry bulk carriers, dry cargo liners, and tankers) involved, whenever shipping any equipment, material, or commodities pursuant to this contract, to the extent such vessels are available at fair and reasonable rates for United States-flag commercial vessels.

2) To furnish within 20 days following the date of loading for shipments originating within the Unites States or within 30 working days following the date of loading for shipments originating outside the united States, a legible copy of a rated, 'on-board' commercial ocean bill-of-lading in English for each shipment of cargo described in paragraph (b) (1) of this section to both the Contracting Officer (through the prime contractor in the case of subcontractor bills-of-lading) and to the Division of National Cargo, Office of Market Development, Maritime Administration, Washington, DC 20590.

3) To insert the substance of the provisions of this clause in all subcontracts issued pursuant to this contract.

^^

8 PROSECUTION AND PROGRESS

Replace "20 days of Contract approval" in the 1st paragraph of section 8-1.02C(5) with:

10 days after contract award by the Board of Supervisors

Replace "Allow 20 days" in the 1st paragraph of section 8-1.02C(5) with:

Allow 10 days

Replace "15 days after Contract approval" in the 1st paragraph of section 8-1.02D(5) with:

10 days after contract award by the Board of Supervisors

Replace "Contract approval" in the 2nd paragraph of section 8-1.02D(5) with:

contract award by the Board of Supervisors

Replace section 8-1.03 with:

8-1.03 PRECONSTRUCTION CONFERENCE

Attend a preconstruction conference with key personnel, including your assigned representatives, major superintendents, and major subcontractors at 255 Glacier Drive, Martinez, California 94553 at a time determined by the Engineer. Be prepared to discuss the scope of work, contract drawings, specifications, existing conditions, materials to be ordered, equipment to be used, and all essential matters pertaining to the prosecution of and the satisfactory completion of the project as required. Submit documents as required before the preconstruction conference. Submit two copies, unless noted otherwise, of the following items before work can begin:

1. Baseline schedule using working days format.
2. The on-site authorized representative (and home phone number) who has complete authority to represent you.
3. A list naming each official (with title) who is authorized to sign contract change orders, daily extra work reports, and the final pay estimate.

4. A list of first tier subcontractors, suppliers, manufacturers, or truckers.
5. A list of all the materials which are to be used on the project, their source, and the name(s) and address(es) of the supplier(s). Please identify each material by contract item number and name.
6. A statement giving the name and address of each subcontractor together with the item number, description, unit cost, and total cost of each item to be subcontracted.
7. A list giving the description, identification number, make, model number, and other necessary information for each piece of equipment to be used on this project. (Do not send listing of all items in equipment pool)
8. Three copies of the "Storm Water Pollution Prevention Plan" or "Water Pollution Control Program" if required by these special provisions.
9. Lead compliance plan.
10. Contractors Quality Control Plan in conformance with section 6-2.02D of these special provisions.
11. Traffic Control Plan, including proposed location for Portable Changeable Message Signs, Construction Staging Plan and Public Access Plan / Marsh Creek Trail Detour Plan in conformance with section 12-3.01A(3) of these special provisions.
12. City and EBRPD Encroachment Permits.
13. Dewatering Plan.
14. Status of long lead-time items (e.g. bridge).
15. Temporary Stream Crossing plan and details.
16. Indicate whether temporary casings are anticipated for drilled holes.
17. Any other submittals and/or approvals required by the Standard Specifications and these special provisions.
18. Street sweeping schedule.
19. Surplus Soil Placement Plan for the Hancock parcel in conformance with Section 19-1.01C.

Replace the 1st and 2nd paragraphs of section 8-1.04B with:

Begin work no sooner than May 4 and no later than May 18. The start of work may be revised if you and the Engineer mutually agree and the Engineer confirms in writing. Even though the counting of working days may have begun, do not begin work before the preconstruction conference is held. Furnish all specified submittals to the Engineer at, or prior to, the preconstruction conference. Obtain all specified approvals contained in the Standard Specifications and these special provisions prior to the beginning of work.

^^

9 PAYMENT

Add to section 9-1.01:

Funding for this project has been provided in full or in part through an Agreement with the Sacramento-San Joaquin Delta Conservancy (Conservancy) pursuant to The Water Quality, Supply, and Infrastructure Improvement Act of 2014 (CWC §79707[g]). The contents of this document do not necessarily reflect the

views and policies of the Conservancy, nor does mention of trade names or commercial products constitute endorsement or recommendation of use.

Add to section 9-1.06A:

The provisions of section 9-1.06B and section 9-1.06C apply only to major items of work as defined herein.

A major item of work is any item for which the cost, computed on the basis of contract unit price and the quantity shown in the proposal, is equal to or greater than ten (10) percent of the original total contract amount.

Delete section 9-1.07.

Add to the 1st paragraph of section 9-1.16B:

If a schedule of values is not specified to be submitted or a payment breakdown is not provided in the payment clause of the applicable Standard Specifications or these Special Provisions, progress payments for lump sum bid items will be a percentage of the lump sum bid item price based on the Engineer's determination of the amount of lump sum work already performed. At your option, submit a lump sum breakdown that provides sufficient detail for the Engineer to determine the value of work performed. The Engineer may consider but not exclusively base the determination of progress payments on your lump sum breakdown. The Engineer's determination of progress payments for lump sum bid items under the Contract will be final in accordance with section 5-1.03 of the Standard Specifications.

Replace section 9-1.16D with:

9-1.16D Mobilization

Mobilization is eligible for partial payments if the Contract includes a bid item for mobilization. If the Contract does not include a mobilization bid item, mobilization is included in the payment for the various bid items. Mobilization is defined in Public Contract Code § 10104 and the Department will make partial payments under Public Contract Code § 10264. Both of these public contract code sections are duplicated below for your convenience.

10104. *As used in this part, "mobilization" includes preparatory work and operations, including, but not limited to, those necessary for the movement of personnel, equipment, supplies and incidentals to the project site, for the establishment of all offices, buildings and other facilities necessary for work on the project, and for all other work and operations which must be performed or costs incurred prior to beginning work on the various items on the project site.*

10264. ***(a)*** *With the exception of projects over water requiring marine access, and which have a* ***contract*** *amount greater than twenty-five million dollars ($25,000,000), in addition to the provisions for partial payment made in Section 10261, the department may make partial payments for the mobilization costs of a* ***contract*** *subject to this chapter, not to exceed the following:*

(1) When 5 percent of the original ***contract*** *amount is earned, 50 percent of the amount bid for mobilization, or 5 percent of the original* ***contract*** *amount, whichever is lesser, may be paid.*
(2) When 10 percent of the original ***contract*** *amount is earned, 75 percent of the amount bid for mobilization or 7.5 percent of the original* ***contract*** *amount, whichever is lesser, may be paid.*
(3) When 20 percent of the original ***contract*** *amount is earned, 95 percent of the amount bid for mobilization, or 9.5 percent of the original* ***contract*** *amount, whichever is lesser, may be paid.*
(4) When 50 percent of the original ***contract*** *amount is earned, 100 percent of the amount bid for mobilization, or 10 percent of the original* ***contract*** *amount, whichever is lesser, may be paid.*
(5) Upon completion of all work on the project, payment of any amount bid for mobilization in excess of 10 percent of the original ***contract*** *amount will be paid.*

Add to section 21-2.02H:

Straw must be certified weed free under the Department of Food and Agriculture.

Add to section 21-2.03A:

Do not place erosion control measures within 3 feet from the edge of pavement.

Apply permanent erosion control materials to all completed embankment areas and cut slopes. Install all fiber rolls that do not conflict with remaining work by September 25th. After October 1st, apply permanent erosion control measures at a maximum of one-week intervals to newly completed embankment areas and cut slopes. Do not unnecessarily delay the completion of embankments and cut slopes to delay application of permanent erosion control measures.

Add to section 21-2.03D:

If notified by the Engineer that an area is ready to receive erosion control materials, start erosion control (hydroseed) work within 5 business days of the Engineer's notification to perform the work.

Apply erosion control (hydroseed) to all disturbed/exposed areas identified with the cut/fill lines shown on the plans and cleared and grubbed areas; areas beyond the cut/fill lines that were unnecessarily disturbed in the opinion of the Engineer will not be included in the payment.

Commercial Fertilizer

Biosol organic fertilizer, or equal, with NPK ration of 7-2-3.

Fiber Mulch

Non-recycled wood fiber produced from cellulose such as wood pulp or similar organic material approved by the O.R. and shall be of such character that it will disperse into a uniform slurry when mixed with water. The fiber shall be of such character that when used in the applied mixture, an absorptive or porous mat, but not a membrane, will result on the surface of the ground. Materials which inhibit germination or growth shall not be present in the mixture.

Water

Of such a quality that it will promote germination and growth of seeds and plants. Water shall not contain weed seeds, nor shall it be obtained from sources containing more salts than are found in irrigation water in the vicinity.

Stabilizing emulsion (Tackifier)

An organic binder derived from husks of plantain. Free-flowing, non-corrosive powder.

Mychorrizal inoculum

AM 120 mychorrizal inoculum applied at the time of planting.

Application

Hydroseed in two passes. First pass must be seed, fertilizer, inoculum, and hydromulch at 500lb/acre. Second pass must be hydromulch at 1000lb/acre.

Apply erosion control (hydroseed) materials in the following proportions:

Material	Pounds Per Acre (Slope Measurement)
Seed	11
Fiber	1,500 total in two applications
Commercial Fertilizer	1,000
Tackifier	60
Mycorrhizal Inoculum	60

The Engineer may change the rates of erosion control (hydroseed) materials to meet field conditions.

Seed may be dry applied at the total rate specified in the preceding table for small areas not accessible by the hydroseeding equipment if approved by the Engineer. Dry-applied seed must be incorporated into the soil a maximum depth of 1/4 inch by dragging or raking.

Add to section 21-2.03O:

Use Erosion Control Blanket Type B.

Replace the 2nd paragraph of section 21-1.03O with:

Fasten RECP to the surface using wood stakes. Secure all fasteners in accordance with State Standard Plan H52 and the manufacturer's recommendations.

Delete Item 2 in section 21-2.02P.

Add to section 21-2.02P:

Fiber Roll, 8-inch diameter. Netting must be biodegradable. No photodegradable, or non-biodegradable netting is allowed.

Replace section 21-3 with:

21-3 PERMANENT EROSION CONTROL ESTABLISHMENT WORK

21-3.01 GENERAL

21-3.01A Summary

Section 21-3 includes specifications for performing permanent erosion control establishment work.

Permanent erosion control establishment work consists of weekly inspections of the project site for deficiencies in erosion control features.

The permanent erosion control establishment period starts after permanent erosion control work has been completed.

The Engineer notifies you when the permanent erosion control establishment period starts and furnishes weekly statements regarding the number of working days credited to the permanent erosion control establishment period after the notification.

At the start of the permanent erosion control establishment period you may request relief from maintenance and protection for work items that are not associated with water pollution control and permanent erosion control establishment work.

Working days on which no work is required during the permanent erosion control establishment period are credited as permanent erosion control establishment working days, regardless of whether or not you performed permanent erosion control establishment work.

Working days on which you fail to adequately perform permanent erosion control establishment work as required are not credited as permanent erosion control establishment working days.

Working days that occur after you fail to meet a due date for a Permanent Erosion Control Establishment (PECE) Report submittal will not be credited as permanent erosion control establishment working days.

21-3.01B Definitions

Not Used

21-3.01C Submittals

Submit a Permanent Erosion Control Establishment (PECE) Report form as an informational submittal within 24 hours of completing a weekly inspection and within 24 hours of each qualifying rain event. The WPC manager is responsible for the preparation and submittal of the PECE report. The report must identify any deficiencies that require repair, adjustment, or reapplication of materials, including:

1. Slides
2. Slipouts
3. Surface erosion
4. Damage to:
    - 4.1. Erosion control devices
    - 4.2. Water pollution control devices
5. Poor seed germination
6. Poor plant growth
7. Dead or damaged erosion control plant material
8. Misaligned features
9. Required repair work

21-3.01D Quality Assurance

Perform a final inspection of the permanent erosion control establishment work in the presence of the Engineer 20 to 30 days before the anticipated contract acceptance date provided by the Engineer.

21-3.02 MATERIALS

Not Used

21-3.03 CONSTRUCTION

Perform work ordered from the PECE report. This work is change order work.

21-3.04 PAYMENT

Not Used

^^^

22 FINISHING ROADWAY

Replace “Not Used” in section 22-1.04 with:

Payment for finishing the roadway is included in the payment for various bid items.

^^

DIVISION IV SUBBASES AND BASES

26 AGGREGATE BASES

Replace the 2nd paragraph of section 26-1.02A with:

Use 3/4-inch maximum aggregate gradation unless otherwise specified. Do not change your selected aggregate gradation without authorization.

Add to the end of the 1st sentence of the 1st paragraph of section 26-1.03E:

ASTM D-1557

^^

DIVISION V SURFACINGS AND PAVEMENTS

39 ASPHALT CONCRETE

Replace section 39 with:

39 HOT MIX ASPHALT

39-1 GENERAL

39-1.01 GENERAL

39-1.01A Summary

Section 39-1 includes general specifications for producing and placing HMA by mixing aggregate and asphalt binder at a mixing plant and spreading and compacting the HMA mixture.

Produce and place HMA Type A under the Method construction process.

39-1.01B Definitions

binder replacement: Amount of RAP binder in OBC in percent.

coarse aggregate: Aggregate retained on a no. 4 sieve.

fine aggregate: Aggregate passing the no. 4 sieve.

processed RAP: RAP that has been fractionated.

substitution rate: Amount of RAP aggregate substituted for virgin aggregate in percent.

supplemental fine aggregate: Aggregate passing the no. 30 sieve, including hydrated lime, portland cement, and fines from dust collectors.

surface course: Upper 0.2 feet of HMA exclusive of OGFC.

39-1.02 MATERIALS

39-1.02A Geosynthetic Pavement Interlayer

Not used.

39-1.02B Tack Coat

Tack coat must comply with section 92. Choose the type and grade.

Notify the Engineer if you dilute asphaltic emulsion with water. The weight ratio of added water to asphaltic emulsion must not exceed 1 to 1.

Measure added water either by weight or volume in compliance with section 9-1.02B or you may use water meters from water districts, cities, or counties. If you measure water by volume, apply a conversion factor to determine the correct weight.

With each dilution, submit:

1. Weight ratio of water to bituminous material in the original asphaltic emulsion
2. Weight of asphaltic emulsion before diluting
3. Weight of added water
4. Final dilution weight ratio of water to asphaltic emulsion

39-1.02C Asphalt Binder

Asphalt binder in HMA must comply with section 92 or section 39-1.02D.

Asphalt binder used in HMA Type A must be PG 64-10.

39-1.02D Asphalt Rubber Binder

39-1.02D(1) General

Use asphalt rubber binder in RHMA-G, RHMA-O, and RHMA-O-HB. Asphalt rubber binder must be a combination of:

1. Asphalt binder
2. Asphalt modifier
3. CRM

The combined asphalt binder and asphalt modifier must be 80.0 ± 2.0 percent by weight of asphalt rubber binder.

39-1.02D(2) Asphalt Modifier

Asphalt modifier must be a resinous, high flash point and aromatic hydrocarbon and must have the values for the quality characteristics shown in the following table:

Asphalt Modifier for Asphalt Rubber Binder

Quality characteristic	Test method	Value
Viscosity, m^2/s (x 10^{-6}) at 100 °C	ASTM D 445	X ± 3 [a]
Flash point, Cleveland Open Cup, °C	ASTM D 92	207 min
Molecular analysis		
Asphaltenes, percent by mass	ASTM D 2007	0.1 max
Aromatics, percent by mass	ASTM D 2007	55 min

[a] The symbol "X" is the proposed asphalt modifier viscosity. "X" must be from 19 to 36. A change in "X" requires a new asphalt rubber binder design.

Asphalt modifier must be from 2.0 to 6.0 percent by weight of the asphalt binder in the asphalt rubber binder.

39-1.02D(3) Crumb Rubber Modifier

CRM consists of a ground or granulated combination of scrap tire crumb rubber and high natural rubber. CRM must be 75.0 ± 2.0 percent scrap tire rubber and 25.0 ± 2.0 percent high natural rubber by total weight of CRM. Scrap tire crumb rubber must be from any combination of automobile tires, truck tires, or tire buffings.

Sample and test the scrap tire crumb rubber and high natural rubber separately. CRM must have the values for the quality characteristics shown in the following table:

Crumb Rubber Modifier for Asphalt Rubber Binder

Quality characteristic	Test method	Value
Scrap tire crumb rubber gradation (% passing no. 8 sieve)	LP-10	100
High natural rubber gradation (% passing no. 10 sieve)	LP-10	100
Wire in CRM (% max.)	LP-10	0.01
Fabric in CRM (% max.)	LP-10	0.05
CRM particle length (inch max.) [a]	--	3/16
CRM specific gravity [a]	California Test 208	1.1–1.2
Natural rubber content in high natural rubber (%) [a]	ASTM D 297	40.0–48.0

[a] Test at mix design and for certificate of compliance.

CRM must be ground and granulated at ambient temperature. If steel and fiber are cryogenically separated, it must occur before grinding and granulating. If cryogenically produced, CRM particles must be large enough to be ground or granulated and not pass through the grinder or granulator.

CRM must be dry, free-flowing particles that do not stick together. CRM must not cause foaming when combined with the asphalt binder and asphalt modifier. You may add calcium carbonate or talc up to 3 percent by weight of CRM.

39-1.02D(4) Asphalt Rubber Binder Design and Profile

Submit a proposal for asphalt rubber binder design and profile. In the design, include the asphalt, asphalt modifier, and CRM and their proportions. The profile is not a performance specification and only serves to indicate expected trends in asphalt rubber binder properties during binder production. The profile must include the same component sources for the asphalt rubber binder used.

Design the asphalt rubber binder from testing you perform for each quality characteristic and for the reaction temperatures expected during production. The 24-hour (1,440-minute) interaction period determines the design profile. At a minimum, mix asphalt rubber binder components, take samples, and perform and record the tests shown in the following table:

Asphalt Rubber Binder Reaction Design Profile

Test	Minutes of reaction [a]							Limits
	45	60	90	120	240	360	1440	
Cone penetration @ 77 °F, 0.10-mm (ASTM D 217)	X [b]				X		X	25–70
Resilience @ 77 °F, percent rebound (ASTM D 5329)	X				X		X	18 min.
Field softening point, °F (ASTM D 36)	X				X		X	125–165
Viscosity, centipoises (LP-11)	X	X	X	X	X	X	X	1,500–4,000

[a] Six hours (360 minutes) after CRM addition, reduce the oven temperature to 275 °F for 16 hours. After the 16-hour (1,320-minutes) cooldown after CRM addition, reheat the binder to the reaction temperature expected during production for sampling and testing at 24 hours (1,440 minutes).
[b] "X" denotes required testing

39-1.02D(5) Asphalt Rubber Binder

After interacting for at least 45 minutes, asphalt rubber binder must have the values for the quality characteristics shown in the following table:

Asphalt Rubber Binder

Quality characteristic	Test for quality control or acceptance	Test method	Value	
			Minimum	Maximum
Cone penetration @ 77 °F, 0.10 mm	Acceptance	ASTM D 217	25	70
Resilience @ 77 °F, percent rebound	Acceptance	ASTM D 5329	18	--
Field softening point, °F	Acceptance	ASTM D 36	125	165
Viscosity @ 375 °F, centipoises	Quality control	LP-11	1,500	4,000

39-1.02E Aggregate

Aggregate must be clean and free from deleterious substances.

Aggregate used in HMA Type A must comply with the 1/2-inch HMA Types A and B gradation.

The specified aggregate gradation must be determined before the addition of asphalt binder and includes supplemental fine aggregate. The Department tests for aggregate grading under California Test 202, modified by California Test 105 if there is a difference in specific gravity of 0.2 or more between the coarse and fine parts of different aggregate blends.

Choose sieve size TV within each TV limit presented in the aggregate gradation tables.

The proposed aggregate gradation must be within the TV limits for the specified sieve sizes shown in the following tables:

Aggregate Gradation
(Percentage Passing)
HMA Types A and B

3/4-inch HMA Types A and B

Sieve sizes	TV limits	Allowable tolerance
1"	100	--
3/4"	90–100	TV ± 5
1/2"	70–90	TV ± 6
No. 4	45–55	TV ± 7
No. 8	32–40	TV ± 5
No. 30	12–21	TV ± 4
No. 200	2.0–7.0	TV ± 2

1/2-inch HMA Types A and B

Sieve sizes	TV limits	Allowable tolerance
3/4"	100	—
1/2"	95–99	TV ± 6
3/8"	75–95	TV ± 6
No. 4	55–66	TV ± 7
No. 8	38–49	TV ± 5
No. 30	15–27	TV ± 4
No. 200	2.0–8.0	TV ± 2

3/8-inch HMA Types A and B

Sieve sizes	TV limits	Allowable tolerance
1/2"	100	--
3/8"	95–100	TV ± 6
No. 4	58–72	TV ± 7
No. 8	34–48	TV ± 6
No. 30	18–32	TV ± 5
No. 200	2.0–9.0	TV ± 2

No. 4 HMA Types A and B

Sieve sizes	TV limits	Allowable tolerance
3/8"	100	--
No. 4	95–100	TV ± 7
No. 8	72–77	TV ± 7
No. 30	37–43	TV ± 7
No. 200	2.0–12.0	TV ± 4

Before the addition of asphalt binder and lime treatment, aggregate must have the values for the quality characteristics shown in the following table:

Aggregate Quality

Quality characteristic	Test method	HMA type			
		A	B	RHMA-G	OGFC
Percent of crushed particles Coarse aggregate (% min.) One fractured face Two fractured faces Fine aggregate (% min) (Passing no. 4 sieve and retained on no. 8 sieve.) One fractured face	California Test 205	 90 75 70	 25 -- 20	 -- 90 70	 90 75 90
Los Angeles Rattler (% max.) Loss at 100 rev. Loss at 500 rev.	California Test 211	 12 45	 -- 50	 12 40	 12 40
Sand equivalent (min.) [a]	California Test 217	47	42	47	--
Fine aggregate angularity (% min.) [b]	California Test 234	45	45	45	--
Flat and elongated particles (% max. by weight @ 5:1)	California Test 235	10	10	10	10

[a] Reported value must be the average of 3 tests from a single sample.
[b] The Engineer waives this specification if HMA contains 10 percent or less of nonmanufactured sand by weight of total aggregate. Manufactured sand is fine aggregate produced by crushing rock or gravel.

39-1.02F Reclaimed Asphalt Pavement

39-1.02F(1) General

You may produce HMA Type A or B using RAP. HMA produced using RAP must comply with the specifications for HMA, except aggregate quality specifications do not apply to RAP. You may substitute RAP at a substitution rate not exceeding 25 percent of the aggregate blend. Do not use RAP in OGFC and RHMA-G.

Assign the substitution rate of RAP aggregate for virgin aggregate with the JMF submittal. The JMF must include the percent of RAP used.

Provide enough space for meeting RAP handling requirements at your facility. Provide a clean, graded, well-drained area for stockpiles. Prevent material contamination and segregation.

If RAP is from multiple sources, blend the RAP thoroughly and completely. RAP stockpiles must be homogeneous.

Isolate the processed RAP stockpiles from other materials. Store processed RAP in conical or longitudinal stockpiles. Processed RAP must not be agglomerated or be allowed to congeal in large stockpiles.

AASHTO T 324 (Modified) is AASHTO T 324, "Hamburg Wheel-Track Testing of Compacted Hot Mix Asphalt (HMA)," with the following parameters:

1. Target air voids must equal 7 ± 1 percent
2. Specimen height must be 60 mm ± 1mm
3. Number of test specimens must be 4
4. Test specimen must be a 150mm gyratory compacted specimen
5. Test temperature must be set at:
   5.1. 122 ± 2 degrees F for PG 58
   5.2. 131 ± 2 degrees F for PG 64
   5.3. 140 ± 2 degrees F for PG 70 and above
6. Measurements for impression must be taken at every 100 passes
7. Inflection point defined as the number of wheel passes at the intersection of the creep slope and the stripping slope
8. Testing shut off must be set at 25,000 passes

39-1.02F(2) Substitution Rate of 15 Percent or Less

For a RAP substitution rate of 15 percent or less, you may stockpile RAP during the entire project.

39-1.02F(3) Substitution Rate Greater than 15 Percent

Not Used

39-1.03 HOT MIX ASPHALT MIX DESIGN REQUIREMENTS

39-1.03A General

The mix design process consists of performing California Test 367 and laboratory procedures on combinations of aggregate gradations and asphalt binder contents to determine the OBC and HMA mixture qualities. The results become the proposed JMF.

Use the *Contractor Hot Mix Asphalt Design Data* form to record aggregate quality and mix design data. Use the *Contractor Job Mix Formula Proposal* form to present the JMF.

Laboratories testing aggregate qualities and preparing the mix design and JMF must be qualified under Caltrans Independent Assurance Program. Take samples under California Test 125.

The Engineer reviews the aggregate qualities, mix design, and JMF and verifies and authorizes the JMF.

You may change the JMF during production. Do not use the changed JMF until it is authorized. Except if adjusting the JMF as specified in section 39-1.03E, perform a new mix design and submit a new JMF submittal if you change any of the following:

1. Target asphalt binder percentage
2. Asphalt binder supplier
3. Asphalt rubber binder supplier
4. Component materials used in asphalt rubber binder or percentage of any component materials
5. Combined aggregate gradation
6. Aggregate sources
7. Substitution rate by more than 5 percent if your assigned RAP substitution rate is 15 percent or less
8. Substitution rate by more than 3 percent if your assigned RAP substitution rate is greater than 15 percent
9. Average binder content by more than 2 percent from the average binder content of the original processed RAP stockpile used in the mix design
10. Maximum specific gravity of processed RAP by more than ±0.060 from the average maximum specific gravity of processed RAP reported on page 4 of your *Contractor Hot Mix Asphalt Design Data* form
11. Any material in the JMF

39-1.03B Hot Mix Asphalt Mix Design

Perform a mix design that produces HMA with the values for the quality characteristics shown in the following table:

HMA Mix Design Requirements

Quality characteristic	Test method	HMA type		
		A	B	RHMA-G
Air void content (%)	California Test 367	4.0	4.0	Note a
Voids in mineral aggregate (% min.)	California Test 367			
No. 4 grading		17.0	17.0	--
3/8" grading		15.0	15.0	--
1/2" grading		14.0	14.0	18.0–23.0
3/4" grading		13.0	13.0	18.0–23.0
Voids filled with asphalt (%)	California Test 367			Note b
No. 4 grading		65.0–75.0	65.0–75.0	
3/8" grading		65.0–75.0	65.0–75.0	
1/2" grading		65.0–75.0	65.0–75.0	
3/4" grading		65.0–75.0	65.0–75.0	
Dust proportion	California Test 367			Note b
No. 4 and 3/8" gradings		0.6–1.2	0.6–1.2	
1/2" and 3/4" gradings		0.6–1.2	0.6–1.2	
Stabilometer value (min.)	California Test 366			
No. 4 and 3/8" gradings		30	30	--
1/2" and 3/4" gradings		37	35	23

[a] Determine the OBC for RHMA-G at _____ percent air voids under California Test 367. The OBC must be greater than or equal to 7.5 percent based on the total weight of mix.
[b] Report this value in the JMF submittal.

For HMA with RAP, the maximum binder replacement must be 25.0 percent of OBC for surface course and 40.0 percent of OBC for lower courses.

For HMA with a binder replacement less than or equal to 25 percent of OBC, you may request that the PG asphalt binder grade with upper and lower temperature classifications be reduced by 6 degrees C from the specified grade.

For HMA with a binder replacement greater than 25 percent but less than or equal to 40 percent of OBC, you must use a PG asphalt binder grade with upper and lower temperature classifications reduced by 6 degrees C from the specified grade.

Report the average of 3 tests. If the range of stability for the 3 briquettes is more than 8 points, prepare new briquettes and test again. The average air void content may vary from the specified air void content by ±0.5 percent.

39-1.03C Job Mix Formula Submittal

Each JMF submittal must consist of:

1. Proposed JMF on a *Contractor Job Mix Formula Proposal* form
2. Mix design records on a *Contractor Hot Mix Asphalt Design Data* form dated within 12 months of submittal
3. JMF verification on a *Caltrans Hot Mix Asphalt Verification* form, if applicable
4. JMF renewal on a *Caltrans Job Mix Formula Renewal* form, if applicable
5. MSDS for the following:
   - 5.1. Asphalt binder
   - 5.2. Base asphalt binder used in asphalt rubber binder
   - 5.3. CRM and asphalt modifier used in asphalt rubber binder
   - 5.4. Blended asphalt rubber binder mixture
   - 5.5. Supplemental fine aggregate except fines from dust collectors
   - 5.6. Antistrip additives

If the Engineer requests, sample the following materials in the presence of the Engineer and place in labeled containers weighing no more than 50 lb each:

1. Coarse, fine, and supplemental fine aggregate from stockpiles, cold feed belts, or hot bins. Samples must be at least 120 lb for each coarse aggregate, 80 lb for each fine aggregate, and 10 lb for each type of supplemental fines. The Department combines these aggregate samples to comply with the JMF TVs submitted on a *Contractor Job Mix Formula Proposal* form.
2. RAP from stockpiles or RAP system. Samples must be at least 60 lb.
3. Asphalt binder from the binder supplier. Samples must be in two 1-quart cylindrical-shaped cans with open top and friction lids.
4. Asphalt rubber binder with the components blended in the proportions to be used. Samples must be in four 1-quart cylindrical-shaped cans with open top and friction lids.

Notify the Engineer at least 2 business days before sampling materials. For aggregate and RAP, split the samples into at least 4 parts. Submit 3 parts to the Engineer and use 1 part for your testing.

For RAP substitution rate greater than 15 percent, submit with the JMF submittal:

1. California Test 371 tensile strength ratio and minimum dry strength test results
2. AASHTO T 324 (Modified) test results

39-1.03D Job Mix Formula Review

The Engineer reviews each mix design and proposed JMF within 5 business days from the complete JMF submittal. The review consists of reviewing the mix design procedures and comparing the proposed JMF with the specifications.

The Engineer may verify aggregate quality characteristics during this review period.

39-1.03E Job Mix Formula Verification

Use the OBC specified on your *Contractor Hot Mix Asphalt Design Data* form. No adjustments to asphalt binder content are allowed. Based on your testing and production experience, you may submit an adjusted aggregate gradation TV on a *Contractor Job Mix Formula Proposal* form before verification testing. Aggregate gradation TV must be within the TV limits specified in the aggregate gradation tables.

For HMA Type A, Type B, and RHMA-G, the Engineer verifies the JMF from samples taken from HMA produced by the plant to be used. Notify the Engineer at least 2 business days before sampling materials.

Asphalt binder set point for HMA must be the OBC specified on your *Contractor Hot Mix Asphalt Design Data* form. When RAP is used, asphalt binder set point for HMA must be:

$$\text{Asphalt Binder Set Point} = \frac{\dfrac{BC_{OBC}}{\left(1 - \dfrac{BC_{OBC}}{100}\right)} - R_{RAP}\left[\dfrac{BC_{RAP}}{\left(1 - \dfrac{BC_{RAP}}{100}\right)}\right]}{100 + \dfrac{BC_{OBC}}{\left(1 - \dfrac{BC_{OBC}}{100}\right)}}$$

Where:
BC_{OBC} = optimum asphalt binder content, percent based on total weight of mix
R_{RAP} = RAP ratio by weight of aggregate
BC_{RAP} = asphalt binder content of RAP, percent based on total weight of RAP mix

In the Engineer's presence and from the same production run, take samples of:

1. Aggregate
2. Asphalt binder
3. RAP
4. HMA

Sample aggregate from cold feed belts or hot bins. Sample RAP from the RAP system. Sample HMA under California Test 125, except if you request and if authorized, you may sample from any of the following locations:

1. Plant
2. Truck
3. Windrow
4. Paver hopper
5. Mat behind the paver

You may sample from a different project, including a non-Department project, if you make arrangements for the Engineer to be present during sampling.

For aggregate, RAP, and HMA, split the samples into at least 4 parts and label their containers. Submit 3 split parts and keep 1 part for your testing.

The Engineer verifies each proposed JMF within 20 days of receiving all verification samples and the JMF submittal has been accepted. If you request, the Engineer verifies RHMA-G quality requirements within 3 business days of sampling. Verification is testing for compliance with the specifications for:

1. Aggregate quality
2. Aggregate gradation TVs within the TV limits
3. Asphalt binder content TV within the TV limit
4. HMA quality specified in the table titled "HMA Mix Design Requirements" except:
   4.1. Air void content, design value ±2.0 percent
   4.2. Voids filled with asphalt, report only
   4.3. Dust proportion, report only

The Engineer prepares 3 briquettes from a single split sample. To verify the JMF for stability and air void content, the Engineer tests the 3 briquettes and reports the average of 3 tests. The Engineer prepares new briquettes if the range of stability for the 3 briquettes is more than 8 points.

The Engineer may use the briquettes used for stability testing to determine bulk specific gravity under California Test 308. If the same briquettes are used and the tests using bulk specific gravity fail, the Engineer prepares 3 new briquettes and determines a new bulk specific gravity.

If tests on plant-produced samples do not verify the JMF, the Engineer notifies you and you must submit a new JMF or submit an adjusted JMF based on your testing. JMF adjustments may include a change in aggregate gradation TV within the TV limits specified in the aggregate gradation tables.

You may adjust the JMF only once due to a failed verification test. An adjusted JMF requires a new *Contractor Job Mix Formula Proposal* form and verification of a plant-produced sample.

A verified JMF is valid for 12 months.

For each HMA type and aggregate size specified, the Engineer verifies at the Department's expense up to 2 proposed JMF, including a JMF adjusted after verification failure. The Engineer deducts $3,000 from payments for each verification exceeding this limit. This deduction does not apply to verifications initiated by the Engineer or JMF renewal.

39-1.03F Job Mix Formula Renewal

You may request a JMF renewal by submitting:

1. Proposed JMF on a *Contractor Job Mix Formula Proposal* form
2. Previously verified JMF documented on a *Caltrans Hot Mix Asphalt Verification* form dated within 12 months
3. Mix design documentation on a *Contractor Hot Mix Asphalt Design Data* form used for the previously verified JMF

Target asphalt binder content on your Contractor *Job Mix Formula Proposal* form and the OBC specified on your *Contractor Hot Mix Asphalt Design Data* form must be the same.

If the Engineer requests, sample the following materials in the presence of the Engineer and place in labeled containers weighing no more than 50 lb each:

1. Coarse, fine, and supplemental fine aggregate from stockpiles, cold feed belts, or hot bins. Samples must include at least 120 lb for each coarse aggregate, 80 lb for each fine aggregate, and 10 lb for each type of supplemental fines. The Department combines these aggregate samples to comply with the JMF TVs submitted on a *Contractor Job Mix Formula Proposal* form.
2. RAP from stockpiles or RAP system. Samples must be at least 60 lb.
3. Asphalt binder from the binder supplier. Samples must be in two 1-quart cylindrical-shaped cans with open top and friction lids.
4. Asphalt rubber binder with the components blended in the proportions to be used. Samples must be in four 1-quart cylindrical-shaped cans with open top and friction lids.

Notify the Engineer at least 2 business days before sampling materials. For aggregate, RAP, and HMA, split samples into at least 4 parts. Submit 3 parts to the Engineer and use 1 part for your testing.

The Engineer may verify aggregate qualities during this review period.

The Engineer verifies the JMF under section 39-1.03E except:

1. Engineer retains samples until you provide test results for your part on a *Contractor Job Mix Formula Renewal* form.
2. Department tests samples of materials obtained from the HMA production unit after you submit test results that comply with the specifications for the quality characteristics in section 39-1.03E.
3. Engineer verifies each proposed JMF renewal within 20 days of receiving verification samples.
4. You may not adjust the JMF due to a failed verification.
5. For each HMA type and aggregate gradation specified, the Engineer verifies at the Department's expense 1 proposed JMF renewal within a 12-month period.

The most recent aggregate quality test results within the past 12 months may be used for verification of JMF renewal or the Engineer may perform aggregate quality tests for verification of JMF renewal.

39-1.03G Job Mix Formula Modification

For an accepted JMF, you may change asphalt binder source one time during production.

Submit your modified JMF request a minimum of 3 business days before production. Each modified JMF submittal must consist of:

1. Proposed modified JMF on *Contractor Job Mix Formula Proposal* form
2. Mix design records on *Contractor Hot Mix Asphalt Design Data* form for the accepted JMF to be modified
3. JMF verification on *Hot Mix Asphalt Verification* form for the accepted JMF to be modified
4. Quality characteristics test results for the modified JMF as specified in section 39-1.03B. Perform tests at the mix design OBC as shown on the *Contractor Asphalt Mix Design Data* form
5. If required, California Test 371 test results for the modified JMF.

With an accepted modified JMF submittal, the Engineer verifies each modified JMF within 5 business days of receiving all verification samples. If California Test 371 is required, the Engineer tests for California Test 371 within 10 days of receiving verification samples.

The Engineer verifies the modified JMF after the modified JMF HMA is placed on the project and verification samples are taken within the first 750 tons following sampling requirements in section 39-1.03E. The Engineer tests verification samples for compliance with:

1. Stability as shown in the table titled "HMA Mix Design Requirements"
2. Air void content at design value ±2.0 percent
3. Voids in mineral aggregate as shown in the table titled "HMA Mix Design Requirements"
4. Voids filled with asphalt, report only

5. Dust proportion, report only

If the modified JMF is verified, the modified JMF will have the same expiration date as the original form.

If a modified JMF is not verified, stop production and any HMA placed using the modified JMF is rejected.

The Engineer deducts $2,000 from payments for each modified JMF verification. The Engineer deducts an additional $2,000 for each modified JMF verification that requires California Test 371.

39-1.03H Job Mix Formula Acceptance

You may start HMA production if:

1. The Engineer's review of the JMF shows compliance with the specifications.
2. The Department has verified the JMF within 12 months before HMA production.
3. The Engineer accepts the verified JMF.

39-1.04 CONTRACTOR QUALITY CONTROL

39-1.04A General

Establish, maintain, and change a quality control system to ensure materials and work comply with the specifications. Submit quality control test results within 3 business days of a request.

You must identify the HMA sampling location in your QC plan. During production, take samples under California Test 125. You may sample HMA from:

1. Plant
2. Truck
3. Windrow
4. Paver hopper
5. Mat behind the paver

39-1.04B Prepaving Conference

Hold a prepaving conference with the Engineer at a mutually agreed time and place. Discuss methods of performing the production and paving work.

39-1.04C Asphalt Rubber Binder

Take asphalt rubber binder samples from the feed line connecting the asphalt rubber binder tank to the HMA plant. Sample and test asphalt rubber binder under Laboratory Procedure LP-11.

Test asphalt rubber binder for compliance with the viscosity specifications in section 39-1.02. During the asphalt rubber binder production and HMA production using asphalt rubber binder, measure the viscosity every hour with not less than 1 reading for each asphalt rubber binder lot. Each asphalt binder lot consists of 1 or multiple batches of combined asphalt binder, asphalt modifier, and CRM proportioned under section 39-1.02D. Log the measurements with the corresponding time and asphalt rubber binder temperature. Submit the log daily.

Submit a certificate of compliance and test results for CRM and asphalt modifier with each truckload delivered to the HMA plant. A certificate of compliance for asphalt modifier must not represent more than 5,000 lb. Use an AASHTO-certified laboratory for testing.

Sample and test gradation and wire and fabric content of CRM once per 10,000 lb of scrap tire crumb rubber and once per 3,400 lb of high natural rubber. Sample and test scrap tire crumb rubber and high natural rubber separately.

Submit certified weight slips for the furnished CRM and asphalt modifier.

39-1.04D Aggregate

Determine the aggregate moisture content and RAP moisture content in continuous mixing plants at least twice a day during production and adjust the plant controller. Determine the RAP moisture content in batch mixing plants at least twice a day during production and adjust the plant controller.

39-1.04E Reclaimed Asphalt Pavement

Perform RAP quality control testing each day.

For RAP substitution rate of 15 percent or less, sample RAP once daily.

Perform QC testing for processed RAP aggregate gradation under California Test 367, appendix B, and submit the results with the combined aggregate gradation.

39-1.04F Density Cores

To determine density for Standard construction process projects, take 4- or 6-inch diameter density cores at least once every 5 business days. Take 1 density core for every 250 tons of HMA from random locations the Engineer designates. Take density cores in the Engineer's presence and backfill and compact holes with authorized material. Before submitting a density core, mark it with the density core's location and place it in a protective container.

If a density core is damaged, replace it with a density core taken within 1 foot longitudinally from the original density core. Relocate any density core located within 1 foot of a rumble strip to 1 foot transversely away from the rumble strip.

39-1.04G Briquettes

Prepare 3 briquettes for each stability and air void content determination. Report the average of 3 tests. Prepare new briquettes and test again when the range of stability for the 3 briquettes is more than 8 points.

You may use the same briquettes used for stability testing to determine bulk specific gravity under California Test 308. If you use these briquettes and tests using bulk specific gravity fail, you may prepare 3 new briquettes and determine a new bulk specific gravity.

39-1.05 ACCEPTANCE CRITERIA

HMA acceptance is specified in the sections for each HMA construction process.

The Department samples materials for testing under California Test 125 and the applicable test method, except samples may be taken:

1. At the plant from a truck or an automatic sampling device
2. From the mat behind the paver

Sampling must be independent of Contractor quality control, statistically based, and random.

If you request, the Department splits samples and provides you with a part.

HMA acceptance is based on:

1. Authorized JMF
2. Accepted QC plan for Standard construction process projects
3. Compliance with the HMA acceptance tables
4. Visual inspection

The Department prepares 3 briquettes for each stability and air void content determination. The average of 3 tests is reported. If the range of stability for the 3 briquettes is more than 8 points, new briquettes are prepared and tested.

The Department may use the briquettes used for stability testing to determine bulk specific gravity under California Test 308. If the Engineer uses the same briquettes and the tests using that bulk specific gravity fail, the Engineer prepares 3 new briquettes and determines a new bulk specific gravity.

39-1.06 DISPUTE RESOLUTION

Work with the Engineer to avoid potential conflicts and to resolve disputes regarding test result discrepancies. Notify the Engineer within 5 business days of receiving a test result if you dispute the test result.

If you or the Engineer dispute each other's test results, submit quality control test results and copies of paperwork including worksheets used to determine the disputed test results. An independent third party performs referee testing. Before the independent third party participates in a dispute resolution, the party must be accredited under Caltrans Independent Assurance Program. The independent third party must be independent of the project. By mutual agreement, the independent third party is chosen from:

1. Department laboratory
2. Department laboratory in a district or region not in the district or region the project is located
3. Transportation Laboratory
4. Laboratory not currently employed by you or your HMA producer

If split quality control or acceptance samples are not available, the independent third party uses any available material representing the disputed HMA for evaluation.

39-1.07 PRODUCTION START-UP EVALUATION

The Engineer evaluates HMA production and placement at production start-up.

Within the first 750 tons produced on the 1st day of HMA production, in the Engineer's presence and from the same production run, take samples of:

1. Aggregate
2. Asphalt binder
3. RAP
4. HMA

Sample aggregate from cold feed belts or hot bins. Take RAP samples from the RAP system. Sample HMA under California Test 125, except if you request and if authorized, you may sample HMA from any of the following locations:

1. Plant
2. Truck
3. Windrow
4. Paver hopper
5. Mat behind the paver

For aggregate, RAP, and HMA, split the samples into at least 4 parts and label their containers. Submit 3 split parts and keep 1 part.

For Standard construction process projects, you and the Department must test the split samples and report test results within 3 business days of sampling. If you proceed before receipt of the test results, the Engineer may consider the HMA placed to be represented by these test results.

For Standard construction process projects, take 4- or 6-inch diameter density cores within the first 750 tons on the 1st day of HMA production. For each density core, the Department reports the bulk specific gravity determined under California Test 308, Method A, in addition to the percent of maximum theoretical density. You may test for in-place density at the density core locations and include them in your production tests for percent of maximum theoretical density.

39-1.08 PRODUCTION

39-1.08A General

Produce HMA in a batch mixing plant or a continuous mixing plant. Proportion aggregate by hot or cold feed control.

HMA plants must be Department qualified. Before production, the HMA plant must have current qualification under the Caltrans Materials Plant Quality Program.

During production, you may adjust hot or cold feed proportion controls for virgin aggregate and RAP.

During production, asphalt binder set point for HMA Type A, HMA Type B, HMA Type C, and RHMA-G must be the OBC shown in *Contractor Hot Mix Asphalt Design Data* form. For OGFC, asphalt binder set

point must be the OBC shown on *Caltrans Hot Mix Asphalt Verification* form. If RAP is used, asphalt binder set point for HMA must be calculated as specified in section 39-1.03E.

For RAP substitution rate of 15 percent or less, you may adjust the RAP by -5 percent.

You must request adjustments to the plant asphalt binder set point based on new RAP stockpiles average asphalt binder content. Do not adjust the HMA plant asphalt binder set point until authorized.

39-1.08B Mixing

Mix HMA ingredients into a homogeneous mixture of coated aggregates.

Asphalt binder must be from 275 to 375 degrees F when mixed with aggregate.

Asphalt rubber binder must be from 375 to 425 degrees F when mixed with aggregate.

When mixed with asphalt binder, aggregate must not be more than 325 degrees F, except aggregate for OGFC must be not more than 275 degrees F. These aggregate temperature specifications do not apply if you use RAP.

HMA with or without RAP must not be more than 325 degrees F.

39-1.08C Asphalt Rubber Binder

Asphalt rubber binder blending plants must have current qualification under the Caltrans Material Plant Quality Program.

Deliver scrap tire crumb rubber and high natural rubber in separate bags.

Either proportion and mix asphalt binder, asphalt modifier, and CRM simultaneously or premix the asphalt binder and asphalt modifier before adding CRM. If you premix the asphalt binder and asphalt modifier, the asphalt binder must be from 375 to 425 degrees F when you add the asphalt modifier. Mix for at least 20 minutes. When you add CRM, the asphalt binder and asphalt modifier must be from 375 to 425 degrees F.

Do not use asphalt rubber binder during the first 45 minutes of the reaction period. During this period, the asphalt rubber binder mixture must be from 375 to the lower of 425 degrees F or 25 degrees F below the asphalt binder's flash point described in the SDS.

If any asphalt rubber binder is not used within 4 hours after the reaction period, discontinue heating. If the asphalt rubber binder drops below 375 degrees F, reheat before use. If you add more scrap tire crumb rubber to the reheated asphalt rubber binder, the binder must react for 45 minutes. The added scrap tire crumb rubber must not exceed 10 percent of the total asphalt rubber binder weight. Reheated and reacted asphalt rubber binder must comply with the viscosity specifications for asphalt rubber binder in section 39-1.02D. Do not reheat asphalt rubber binder more than twice.

39-1.09 SUBGRADE, TACK COAT, AND GEOSYNTHETIC PAVEMENT INTERLAYER

39-1.09A General

Prepare subgrade or apply tack coat to surfaces receiving HMA. If specified, place geosynthetic pavement interlayer over a coat of asphalt binder.

39-1.09B Subgrade

Subgrade to receive HMA must comply with the compaction and elevation tolerance specifications in the sections for the material involved. Subgrade must be free of loose and extraneous material. If HMA is paved on existing base or pavement, remove loose paving particles, dirt, and other extraneous material by any means including flushing and sweeping.

39-1.09C Tack Coat

Apply tack coat:

1. To existing pavement, including planed surfaces
2. Between HMA layers
3. To vertical surfaces of:
    3.1. Curbs

3.2. Gutters
3.3. Construction joints
4. To all base failure and/or pavement failure repairs

Apply tack coat in one application prior to overlaying with HMA or installing geosynthetic pavement interlayer.

The application rate must be the minimum residual rate specified for the underlying surface conditions shown in the following tables:

Tack Coat Application Rates for HMA Type A, Type B, and RHMA-G

HMA overlay over:	Minimum residual rates (gal/sq yd)		
	CSS1/CSS1h, SS1/SS1h and QS1h/CQS1h asphaltic emulsion	CRS1/CRS2, RS1/RS2 and QS1/CQS1 asphaltic emulsion	Asphalt binder and PMRS2/PMCRS2 and PMRS2h/PMCRS2h asphaltic emulsion
New HMA (between layers)	0.02	0.03	0.02
PCC and existing HMA (AC) surfaces	0.03	0.04	0.03
Planed PCC and HMA (AC) surfaces	0.05	0.06	0.04

Tack Coat Application Rates for OGFC

OGFC over:	Minimum residual rates (gal/sq yd)		
	CSS1/CSS1h, SS1/SS1h and QS1h/CQS1h asphaltic emulsion	CRS1/CRS2, RS1/RS2 and QS1/CQS1 asphaltic emulsion	Asphalt binder and PMRS2/PMCRS2 and PMRS2h/PMCRS2h asphaltic emulsion
New HMA	0.03	0.04	0.03
PCC and existing HMA (AC) surfaces	0.05	0.06	0.04
Planed PCC and HMA (AC) surfaces	0.06	0.07	0.05

If you dilute asphaltic emulsion, mix until homogeneous before application.

For vertical surfaces, apply a residual tack coat rate that will thoroughly coat the vertical face without running off.

If you request and if authorized, you may:

1. Change tack coat rates
2. Omit tack coat between layers of new HMA during the same work shift if:
   2.1. No dust, dirt, or extraneous material is present
   2.2. Surface is at least 140 degrees F

Immediately in advance of placing HMA, apply additional tack coat to damaged areas or where loose or extraneous material is removed.

Close areas receiving tack coat to traffic. Do not track tack coat onto pavement surfaces beyond the job site.

Asphalt binder tack coat must be from 285 to 350 degrees F when applied.

39-1.09D Geosynthetic Pavement Interlayer

Not used.

39-1.10 SPREADING AND COMPACTING EQUIPMENT

Paving equipment for spreading must be:

1. Self-propelled
2. Mechanical
3. Equipped with a screed or strike-off assembly that can distribute HMA the full width of a traffic lane
4. Equipped with a full-width compacting device
5. Equipped with automatic screed controls and sensing devices that control the thickness, longitudinal grade, and transverse screed slope

When paving contiguously with previously placed mats, the end of the screed adjacent to the previously placed mat must be controlled by a sensor that responds to the grade of the previously placed mat and will reproduce the grade in the new mat within a 0.01-foot tolerance. The end of the screed farthest from the previously placed mat must be controlled in the same way it was controlled when placing the initial mat.

Install and maintain grade and slope references.

The screed must produce a uniform HMA surface texture without tearing, shoving, or gouging.

The paver must not leave marks such as ridges and indentations, unless you can eliminate them by rolling.

Rollers must be equipped with a system that prevents HMA from sticking to the wheels. You may use a parting agent that does not damage the HMA or impede the bonding of layers.

In areas inaccessible to spreading and compacting equipment:

1. Spread the HMA by any means to obtain the specified lines, grades, and cross sections.
2. Use a pneumatic tamper, plate compactor, or equivalent to achieve thorough compaction.

When the plans show areas where new paving is 8 feet or less in width, or the total contract requires less than 150 tons of hot mix asphalt, and the areas are not classified as miscellaneous areas, the hot mix asphalt may be spread in these areas by means of a spreader box. The spreader box must be self-supported by wheels or tracks and have a screed that will produce a compacted surfacing of uniform smoothness and texture. The spreader box may be drawn by the hot mix asphalt material supply vehicle.

39-1.11 CONSTRUCTION

39-1.11A General

Do not place HMA on wet pavement or a frozen surface.

You may deposit HMA in a windrow and load it in the paver if:

1. Paver is equipped with a hopper that automatically feeds the screed
2. Loading equipment can pick up the windrowed material and deposit it in the paver hopper without damaging base material
3. Activities for deposit, pickup, loading, and paving are continuous
4. HMA temperature in the windrow does not fall below 260 degrees F

You may place HMA in 1 or more layers on areas less than 5 feet wide and outside the traveled way, including shoulders. You may use mechanical equipment other than a paver for these areas. The equipment must produce uniform smoothness and texture.

HMA handled, spread, or windrowed must not stain the finished surface of any improvement, including pavement.

Do not use petroleum products such as kerosene or diesel fuel to release HMA from trucks, spreaders, or compactors.

HMA must be free of:

1. Segregation
2. Coarse or fine aggregate pockets

3. Hardened lumps

Prior to obliterating any pavement delineation (traffic stripes, pavement markings, and pavement markers), that is to be replaced on the same alignment and location, reference the pavement delineation with a sufficient number of control points to reestablish the alignment and location of the new pavement delineation. The references must include the limits or changes in striping pattern, including one- and 2-way barrier lines, limit lines, crosswalks and other pavement markings.

Before placing a HMA overlay, cover manholes, valve and monument covers, grates, or other exposed facilities located within the area of application, using a plastic or oil resistant construction paper secured to the facility being covered by tape or adhesive. Reference the covered facilities with a sufficient number of control points to relocate the facilities after placing the HMA overlay.

Wherever final placement of HMA is complete, place permanent traffic stripes and pavement markings within 10 days.

Obtain hot mix asphalt placed in the top layer of the surfacing from only one hot mix asphalt plant.

39-1.11B Longitudinal Joints

Longitudinal joints in the top layer must match specified lane edges. Alternate the longitudinal joint offsets in the lower layers at least 0.5 foot from each side of the specified lane edges. You may request other longitudinal joint placement patterns.

39-1.11C Widening Existing Pavement

Not used.

39-1.11D Shoulders, Medians, and Other Road Connections

Until the adjoining through lane's top layer has been paved, do not pave the top layer of:

1. Shoulders
2. Tapers
3. Transitions
4. Road connections
5. Driveways
6. Curve widenings
7. Chain control lanes
8. Turnouts
9. Turn pockets

If the number of lanes changes, pave each through lane's top layer before paving a tapering lane's top layer. Simultaneous to paving a through lane's top layer, you may pave an adjoining area's top layer, including shoulders. Do not operate spreading equipment on any area's top layer until completing final compaction.

Pave shoulders and median borders adjacent to the lane before opening a lane to traffic.

Place additional HMA along the pavement's edge to conform to road connections and driveways. Hand rake, if necessary, and compact the additional HMA to form a smooth conform taper.

39-1.11E Leveling

If leveling with HMA is specified, fill and level irregularities and ruts with HMA before spreading HMA over the base, existing surfaces, or bridge decks. You may use mechanical equipment other than a paver for these areas. The equipment must produce uniform smoothness and texture. HMA used to change an existing surface's cross slope or profile is not paid for as HMA (leveling).

If placing HMA against the edge of existing pavement, sawcut or grind the pavement straight and vertical along the joint and remove extraneous material.

Use 1/2-inch HMA Type A for the HMA leveling course.

39-1.11F Compaction

Rolling must leave the completed surface compacted and smooth without tearing, cracking, or shoving. Complete finish rolling activities before the pavement surface temperature is:

1. Below 150 degrees F for HMA with unmodified binder
2. Below 140 degrees F for HMA with modified binder
3. Below 200 degrees F for RHMA-G

If a vibratory roller is used as a finish roller, turn the vibrator off.

Do not use a pneumatic-tired roller to compact RHMA-G.

For Standard construction processes, if 3/4-inch aggregate grading is specified, you may use a 1/2-inch aggregate grading if the specified total paved thickness is at least 0.15 foot and less than 0.20 foot thick.

Spread and compact HMA under sections 39-3.03 and 39-3.04 if any of the following applies:

1. Specified paved thickness is less than 0.15 foot.
2. Specified paved thickness is less than 0.20 foot and 3/4-inch aggregate grading is specified and used.
3. You spread and compact at:
   - 3.1. Asphalt concrete surfacing replacement areas
   - 3.2. Leveling courses
   - 3.3. Areas for which the Engineer determines conventional compaction and compaction measurement methods are impeded

Do not open new HMA pavement to public traffic until its mid-depth temperature is below 160 degrees F.

If you request and if authorized, you may cool HMA Type A and Type B with water when rolling activities are complete. Apply water under section 10-6.

Spread sand at a rate from 1 to 2 lb/sq yd on new RHMA-G, RHMA-O, and RHMA-O-HB pavement when finish rolling is complete. Sand must be free of clay or organic matter. Sand must comply with section 90-1.02C(4)(c). Keep traffic off the pavement until spreading sand is complete.

While spreading the final lift of hot mix asphalt (wearing surface), carefully remove and dispose of all excess hot mix asphalt along cold joints. Do not place this excess material by any means over the hot mix asphalt being spread (i.e., no broadcasting of excess material over mat).

39-1.12 SMOOTHNESS

Not used.

39-1.13 HOT MIX ASPHALT ON BRIDGE DECKS

Not used.

39-1.14 MISCELLANEOUS AREAS AND DIKES

Prepare the area to receive HMA for miscellaneous areas and dikes, including any excavation and backfill as needed.

The following specifications in section 39 do not apply to miscellaneous areas and dikes:

1. HMA construction process
2. HMA mix design requirements
3. Contractor quality control
4. Production start-up evaluation

Miscellaneous areas are outside the traveled way and include:

1. Median areas not including inside shoulders
2. Island areas
3. Sidewalks
4. Gutters

5. Gutter flares
6. Ditches
7. Overside drains
8. Aprons at the ends of drainage structures

Spread miscellaneous areas in 1 layer and compact to the specified lines and grades.

For miscellaneous areas and dikes:

1. Do not submit a JMF.
2. Use 1/2-inch HMA Type A for driveway/private street conforms, island areas, and sidewalks; for all other miscellaneous areas use 3/8-inch HMA Type A.
3. Minimum asphalt binder content must be 6.4 percent for 3/8-inch aggregate and 5.7 percent for 1/2-inch aggregate. If you request and if authorized, you may reduce the minimum asphalt binder content.
4. Choose asphalt binder Grade PG 70-10 or the same grade specified for HMA.

39-1.15 MINOR HOT MIX ASPHALT

39-1.15A GENERAL

39-1.15A(1) Summary

The following specifications in section 39 do not apply to minor HMA:

1. HMA construction process
2. HMA mix design requirements
3. Contractor quality control
4. Production start-up evaluation

39-1.15A(2) Definitions

Reserved

39-1.15A(3) Submittals

Reserved

39-1.15A(4) Quality Control and Assurance

Reserved

39-1.15B MATERIALS

The minimum asphalt binder content must be 6.4 percent for 3/8-inch aggregate gradation and 5.7 percent for 1/2-inch aggregate gradation.

Choose asphalt binder Grade PG 64-10, PG 64-16, or PG 70-10.

If you request and if authorized, you may reduce the minimum asphalt binder content.

Choose the 3/8-inch or 1/2-inch HMA Type A or Type B aggregate gradation.

39-1.15C CONSTRUCTION

Produce HMA at a central mixing plant.

Choose any method and equipment to spread and compact.

The surface must be:

1. Textured uniformly
2. Compacted firmly
3. Without depressions, humps, and irregularities

Smoothness specifications do not apply.

39-1.16 – 39-1.38 RESERVED

39-1.39 PAVEMENT FAILURE REPAIR

39-1.39A GENERAL

Remove existing asphalt concrete pavement to the depth and dimensions shown and replace with HMA. The Engineer determines the exact limits of pavement failure repair. The minimum width of roadway section to be removed must not be less than 4 feet unless otherwise noted.

The following specifications in section 39 do not apply to pavement failure repair:

1. Contractor quality control
2. Production start-up evaluation
3. Smoothness

39-1.39B MATERIALS

HMA for pavement failure repair must be Type A.

Asphalt binder for the HMA must be PG 64-10. The minimum asphalt binder content must be 5.0 percent. If you request and if authorized, you may reduce the minimum asphalt binder content.

The aggregate for the HMA must comply with the 3/4-inch HMA Types A and B grading.

39-1.39C CONSTRUCTION

Place pavement failure repair under the Method construction process in section 39-3.

Provide flaggers and/or traffic control to allow the Engineer to mark out pavement failure areas.

Remove existing roadway section by grinding with a milling machine capable of cutting to a neat line. Do not damage any pavement that is to remain in place. Minimize the disturbance of materials to be left in place during removal or roadway sections.

Dispose of removed material.

Apply tack coat to the bottom and all vertical surfaces of the existing roadway section within the pavement failure repair area. Follow the Tack Application Rates table using "Planed PCC and HMA (AC) surfaces".

The surface must be:

1. Textured uniformly
2. Compacted firmly
3. Without depressions, humps, and irregularities

If the base is excavated beyond the specified plane, replace it with HMA. The Department does not pay for this HMA. Repair damage to pavement which is to remain in place to a condition satisfactory to the Engineer, or remove the damaged pavement and replace with new HMA if ordered by the Engineer. Repairing or removing and replacing pavement damaged outside the limits of pavement to be reconstructed is at your expense.

Complete pavement failure repair in a lane before the lane is specified to be opened to traffic under section 12-4.

39-1.39D PAYMENT

Pavement failure repair is measured based on the specified dimensions and any adjustments ordered.

You will receive no additional payment for pavement failure repair beyond the area marked out by the Engineer due to availability or limitations of your equipment.

Section 9-1.06 "Changed Quantity Payment Adjustments" will not apply to the pavement failure repair item.

39-1.40 BASE FAILURE REPAIR

39-1.40A GENERAL

Remove existing asphalt concrete pavement and underlying base rock to the depth and dimensions shown and replace with HMA. The Engineer determines the exact limits of base failure repair. The minimum width of roadway section to be removed must not be less than 4 feet unless otherwise noted.

The following specifications in section 39 do not apply to base failure repair:

1. Contractor quality control
2. Production start-up evaluation
3. Smoothness

39-1.40B MATERIALS

HMA for pavement failure repair must be Type A.

Asphalt binder for the HMA must be PG 64-10. The minimum asphalt binder content must be 5.0 percent. If you request and if authorized, you may reduce the minimum asphalt binder content.

The aggregate for the HMA must comply with the 3/4-inch HMA Types A and B grading.

39-1.40C CONSTRUCTION

Place base failure repair under the Method construction process in section 39-3.

Provide flaggers and/or traffic control to allow the Engineer to mark out base failure areas.

Remove existing roadway section by grinding with a milling machine capable of cutting to a neat line. Do not damage any pavement that is to remain in place. Minimize the disturbance of materials to be left in place during removal or roadway sections.

Remove failed pavement and base rock to the required depth, then grade, water, and thoroughly compact the material remaining in place to a minimum of 95% relative compaction.

Dispose of removed material.

Apply tack coat to the bottom base rock and all vertical surfaces of the existing roadway section within the base failure repair area. Follow the Tack Application Rates table using "Planed PCC and HMA (AC) surfaces".

The surface must be:

1. Textured uniformly
2. Compacted firmly
3. Without depressions, humps, and irregularities

If the base is excavated beyond the specified plane, replace it with HMA. The Department does not pay for this HMA. Repair damage to pavement which is to remain in place to a condition satisfactory to the Engineer, or remove the damaged pavement and replace with new HMA if ordered by the Engineer. Repairing or removing and replacing pavement damaged outside the limits of pavement to be reconstructed is at your expense.

Complete base failure repair in a lane before the lane is specified to be opened to traffic under section 12-4.

39-1.40D PAYMENT

Base failure repair is measured based on the specified dimensions and any adjustments ordered.

You will receive no additional payment for base failure repair beyond the area marked out by the Engineer due to availability or limitations of your equipment.

Section 9-1.06 "Changed Quantity Payment Adjustments" will not apply to the base failure repair item.

39-2 STANDARD CONSTRUCTION PROCESS

39-2.01 GENERAL

Section 39-2 includes specifications for HMA produced and constructed under the Standard construction process.

At locations where hot mix asphalt total paved compacted thickness is less than 0.15 feet or where the width is less than 4 feet, spread and compact with the equipment and by the methods specified in section 39-3. Spread and compact all other hot mix asphalt in conformance with section 39-2.

39-2.02 CONTRACTOR QUALITY CONTROL

39-2.02A Quality Control Plan

Establish, implement, and maintain a QC plan for HMA. The QC plan must describe the organization and procedures you will use to:

1. Control the quality characteristics
2. Determine when corrective actions are needed (action limits)
3. Implement corrective actions

When you submit the proposed JMF, submit the proposed QC plan. You and the Engineer must discuss the QC plan during the prepaving conference.

The QC plan must address the elements affecting HMA quality including:

1. Aggregate
2. Asphalt binder
3. Additives
4. Production
5. Paving

The Engineer reviews each QC plan within 5 business days from the submittal. Do not produce HMA until the Engineer authorizes the QC plan.

39-2.02B Quality Control Testing

Perform sampling and testing at the specified frequency for the quality characteristics shown in the following table:

Minimum Quality Control—Standard Construction Process

Quality characteristic	Test method	Minimum sampling and testing frequency	HMA type			
			A	B	RHMA-G	OGFC
Aggregate gradation[a]	California Test 202	1 per 750 tons and any remaining part at the end of the project	JMF ± Tolerance[b]	JMF ± Tolerance[b]	JMF ± Tolerance[b]	JMF ± Tolerance[b]
Sand equivalent (min)[c]	California Test 217		47	42	47	--
Asphalt binder content (%)	California Test 379 or 382		JMF±0.40	JMF±0.40	JMF ± 0.40	JMF ± 0.40
HMA moisture content (%, max)	California Test 226 or 370	1 per 2,500 tons but not less than 1 per paving day	1.0	1.0	1.0	1.0
Field compaction (% max. theoretical density)[d,e]	QC plan	2 per business day (min.)	92–97	92–97	92–97	--
Stabilometer value (min)[c]	California Test 366	1 per 4,000 tons or 2 per 5 business days, whichever is greater				
No. 4 and 3/8" gradings			30	30	--	--
1/2" and 3/4" gradings			37	35	23	--
Air void content (%)[c, f]	California Test 367		4 ± 2	4 ± 2	TV ± 2	--
Aggregate moisture content at continuous mixing plants and RAP moisture content at continuous mixing plants and batch mixing plants[g]	California Test 226 or 370	2 per day during production	--	--	--	--
Percent of crushed particles coarse aggregate (%, min)	California Test 205	As designated in the QC plan. At least once per project				
One fractured face			90	25	--	90
Two fractured faces			75	--	90	75
Fine aggregate (%, min) (Passing no. 4 sieve and retained on no. 8 sieve.) One fractured face			70	20	70	90

Los Angeles Rattler (%, max) Loss at 100 rev. Loss at 500 rev.	California Test 211		12 45	-- 50	12 40	12 40
Flat and elongated particles (%, max by weight @ 5:1)	California Test 235		Report only	Report only	Report only	Report only
Fine aggregate angularity (%, min)[h]	California Test 234		45	45	45	--
Voids filled with asphalt (%)[i] No. 4 grading 3/8" grading 1/2" grading 3/4" grading	California Test 367		65.0–75.0 65.0–75.0 65.0–75.0 65.0–75.0	65.0–75.0 65.0–75.0 65.0–75.0 65.0–75.0	Report only	--
Voids in mineral aggregate (% min)[i] No. 4 grading 3/8" grading 1/2" grading 3/4" grading	California Test 367		17.0 15.0 14.0 13.0	17.0 15.0 14.0 13.0	-- -- 18.0–23.0 18.0–23.0	--
Dust proportion[i] No. 4 and 3/8" gradings 1/2" and 3/4" gradings	California Test 367		0.6-1.2 0.6–1.2	0.6-1.2 0.6–1.2	Report only	--
Hamburg wheel track (minimum number of passes at 0.5 inch average rut depth)[j] PG-58 PG-64 PG-70 PG-76 or higher	AASHTO T 324 (Modified)	1 per 10,000 tons or 1 per project whichever is more	10,000 15,000 20,000 25,000	10,000 15,000 20,000 25,000	--	--
Hamburg wheel track (inflection point minimum number of passes)[j] PG-58 PG-64 PG-70 PG-76 or higher	AASHTO T 324 (Modified)	1 per 10,000 tons or 1 per project whichever is more	10,000 10,000 12,500 15000	10,000 10,000 12,500 15000	--	--
Moisture susceptibility (minimum dry strength, psi)[j]	California Test 371	For RAP ≥15% 1 per 10,000 tons or 1 per project whichever is greater	120	120	--	--

Moisture susceptibility (tensile strength ration, %)[j]	California Test 371	For RAP ≥15% 1 per 10,000 tons or 1 per project whichever is greater	70	70	--	--
Smoothness	Section 39-1.12	--	12-foot straight-edge, must grind, and PI_0	12-foot straight-edge, must grind, and PI_0	12-foot straight-edge, must grind, and PI_0	12-foot straight-edge, must grind, and PI_0
Asphalt rubber binder viscosity @ 375 °F, centipoises	Section 39-1.02D	Section 39-1.04C	--	--	1,500–4,000	1,500–4,000
Asphalt modifier	Section 39-1.02D	Section 39-1.04C	--	--	Section 39-1.02D	Section 39-1.02D
CRM	Section 39-1.02D	Section 39-1.04C	--	--	Section 39-1.02D	Section 39-1.02D

[a] Determine combined aggregate gradation containing RAP under California Test 367.
[b] The tolerances must comply with the allowable tolerances in section 39-1.02E.
[c] Report the average of 3 tests from a single split sample.
[d] Determine field compaction for any of the following conditions:
1. 1/2-inch, 3/8-inch, or no. 4 aggregate grading is used and the specified total paved thickness is at least 0.15 foot.
2. 3/4-inch aggregate grading is used and the specified total paved thickness is at least 0.20 foot.

[e] To determine field compaction use:
1. In-place density measurements using the method specified in your QC plan.
2. California Test 309 to determine the maximum theoretical density at the frequency specified in California Test 375, Part 5C.

[f] Determine the bulk specific gravity of each lab-compacted briquette under California Test 308, Method A, and theoretical maximum specific gravity under California Test 309.
[g] For adjusting the plant controller at the HMA plant.
[h] The Engineer waives this specification if HMA contains 10 percent or less of nonmanufactured sand by weight of total aggregate. Manufactured sand is fine aggregate produced by crushing rock or gravel.
[i] Report only.
[j] Applies to RAP substitution rate greater than 15 percent.

For any single quality characteristic except smoothness, if 2 consecutive quality control test results do not comply with the action limits or specifications:

1. Stop production.
2. Notify the Engineer.
3. Take corrective action.
4. Demonstrate compliance with the specifications before resuming production and placement.

39-2.03 ACCEPTANCE CRITERIA
39-2.03A Testing
The Department samples for acceptance testing and tests for the quality characteristics shown in the following table:

HMA Acceptance—Standard Construction Process

Quality characteristic	Test method	HMA type			
		A	B	RHMA-G	OGFC
Aggregate gradation [a]	California Test 202	JMF ± tolerance [c]	JMF ± tolerance [c]	JMF ± tolerance [c]	JMF ± tolerance [c]
Sieve: 3/4", 1/2", 3/8"					
1/2": X [b]					
3/8": X					
No. 4: X					
No. 8: X, X, X					
No. 200: X, X, X					
Sand equivalent (min) [d]	California Test 217	47	42	47	--
Asphalt binder content (%)	California Test 379 or 382	JMF±0.40	JMF±0.40	JMF ± 0.40	JMF ± 0.40
HMA moisture content (%, max)	California Test 226 or 370	1.0	1.0	1.0	1.0
Field compaction (% max. theoretical density) [e, f]	California Test 375	92–97	92–97	92–97	--
Stabilometer value (min)[d,]	California Test 366				
No. 4 and 3/8" gradings		30	30	--	--
1/2" and 3/4" gradings		37	35	23	--
Air void content (%) [d, g]	California Test 367	4 ± 2	4 ± 2	TV ± 2	--
Percent of crushed particles	California Test 205				
Coarse aggregate (%, min)					
One fractured face		90	25	--	90
Two fractured faces		75	--	90	75
Fine aggregate (%, min) (Passing no. 4 sieve and retained on no. 8 sieve.)					
One fractured face		70	20	70	90
Los Angeles Rattler (%, max)	California Test 211				
Loss at 100 rev.		12	--	12	12
Loss at 500 rev.		45	50	40	40
Fine aggregate angularity (%, min)[h]	California Test 234	45	45	45	--
Flat and elongated particles (%, max by weight @ 5:1)	California Test 235	Report only	Report only	Report only	Report only
Voids filled with asphalt (%) [i]	California Test 367				
No. 4 grading		65.0–75.0	65.0–75.0	Report only	--
3/8" grading		65.0–75.0	65.0–75.0		
1/2" grading		65.0–75.0	65.0–75.0		
3/4" grading		65.0–75.0	65.0–75.0		
Voids in mineral aggregate (% min) [i]	California Test 367				
No. 4 grading		17.0	17.0	--	--
3/8" grading		15.0	15.0	--	
1/2" grading		14.0	14.0	18.0–23.0	
3/4" grading		13.0	13.0	18.0–23.0	
Dust proportion [i]	California Test 367				
No. 4 and 3/8" gradings		0.6-1.2	0.6-1.2	Report only	--
1/2" and 3/4" gradings		0.6–1.2	0.6–1.2		

Hamburg wheel track (minimum number of passes at 0.5 inch average rut depth)[j] PG-58 PG-64 PG-70 PG-76 or higher	AASHTO T 324 (Modified)	 10,000 15,000 20,000 25,000	 10,000 15,000 20,000 25,000	--	--
Hamburg wheel track (inflection point minimum number of passes)[j] PG-58 PG-64 PG-70 PG-76 or higher	AASHTO T 324 (Modified)	 10,000 10,000 12,500 15000	 10,000 10,000 12,500 15000	--	--
Moisture susceptibility (minimum dry strength, psi)[j]	California Test 371	120	120	--	--
Moisture susceptibility (tensile strength ration, %)[j]	California Test 371	70	70	--	--
Smoothness	Section 39-1.12	12-foot straight-edge, must grind, and PI_0	12-foot straight-edge, must grind, and PI_0	12-foot straight-edge, must grind, and PI_0	12-foot straight-edge and must grind
Asphalt binder	Various	Section 92	Section 92	Section 92	Section 92
Asphalt rubber binder	Various	--	--	Section 92-1.01D(2) and section 39-1.02D	Section 92-1.01D(2) and section 39-1.02D
Asphalt modifier	Various	--	--	Section 39-1.02D	Section 39-1.02D
CRM	Various	--	--	Section 39-1.02D	Section 39-1.02D

[a] The Engineer determines combined aggregate gradations containing RAP under California Test 367.
[b] "X" denotes the sieves the Engineer tests for the specified aggregate gradation.
[c] The tolerances must comply with the allowable tolerances in section 39-1.02E.
[d] The Engineer reports the average of 3 tests from a single split sample.
[e] The Engineer determines field compaction for any of the following conditions:

1. 1/2-inch, 3/8-inch, or no. 4 aggregate grading is used and the specified total paved thickness is at least 0.15 foot.2. 3/4-inch aggregate grading is used and the specified total paved thickness is at least 0.20 foot.

[f] To determine field compaction, the Engineer uses:

1. California Test 308, Method A, to determine in-place density of each density core.
2. California Test 309 to determine the maximum theoretical density at the frequency specified in California Test 375, Part 5C.

[g]The Engineer determines the bulk specific gravity of each lab-compacted briquette under California Test 308, Method A, and theoretical maximum specific gravity under California Test 309.
[h] The Engineer waives this specification if HMA contains 10 percent or less of nonmanufactured sand by weight of total aggregate. Manufactured sand is fine aggregate produced by crushing rock or gravel.
[i] Report only.
[j]Applies to RAP substitution rate greater than 15 percent.

No single test result may represent more than 750 tons or 1 day's production, whichever is less.

For any single quality characteristic except smoothness, if 2 consecutive acceptance test results do not comply with the specifications:

1. Stop production.
2. Take corrective action.
3. Take samples and split each sample into 4 parts in the Engineer's presence. Test 1 part for compliance with the specifications and submit 3 parts to the Engineer. The Department tests 1 part for compliance with the specifications and reserves and stores 2 parts.
4. Demonstrate compliance with the specifications before resuming production and placement.

The Department tests the density core you take from each 250 tons of HMA production. The Department determines the percent of maximum theoretical density for each density core by determining the density core's density and dividing by the maximum theoretical density.

The Engineer determines the percent of maximum theoretical density from density cores taken from the final layer measured the full depth of the total paved HMA thickness if any of the following applies:

1. 1/2-inch, 3/8-inch, or no. 4 aggregate grading is used and the specified total paved thickness is at least 0.15 foot and any layer is less than 0.15 foot.
2. 3/4-inch aggregate grading is used and the specified total paved thickness is at least 0.2 foot and any layer is less than 0.20 foot.

For percent of maximum theoretical density, the Engineer determines a deduction for each test result outside the specifications using the reduced payment factors shown in the following table:

Reduced Payment Factors for Percent of Maximum Theoretical Density

HMA Type A and B and RHMA-G Percent of Maximum Theoretical Density	Reduced Payment Factor	HMA Type A and B and RHMA-G Percent of Maximum Theoretical Density	Reduced Payment Factor
92.0	0.0000	97.0	0.0000
91.9	0.1100	97.1	0.0250
91.8	0.1200	97.2	0.0500
91.7	0.1300	97.3	0.0750
91.6	0.1400	97.4	0.1000
91.5	0.1500	97.5	0.1250
91.4	0.1600	> 97.5	Remove and Replace
91.3	0.1700		
91.2	0.1800		
91.1	0.1900		
91.0	0.2000		
90.9	0.2100		
90.8	0.2200		
90.7	0.2300		
90.6	0.2400		
90.5	0.2500		
90.4	0.2600		
90.3	0.2700		
90.2	0.2800		
90.1	0.2900		
90.0	0.3000		
< 90.0	Remove and Replace		

State the Maximum Theoretical Density determined by CTM 309 on the approved mix design. This will be initially used to calculate Relative Compaction. A Rice Gravity test (CTM 309) will be performed for every 750 tons of hot mix asphalt or for the batch of hot mix asphalt placed daily, whichever is more frequent. Each Rice Gravity value determined, including the value stated on the mix design, will comprise a moving average of the Maximum Theoretical Density to be used to calculate Relative Compaction. Any CTM 309 result that varies from the moving average by ±0.04 g/cc will not be used until quality assurance testing verifies the material is within specification, based on Sieve Analysis (CTM 202) and Asphalt Content (CTM 382). Relative Compaction will be determined using a nuclear density device to measure in-place density of compacted HMA, in accordance with CTM 375.

Should the relative compaction fall outside of the 92.0 – 97.0 range, in-place density using density cores will be performed in accordance with section 39-2.03A and results will be used to calculate any payment reductions.

39-2.04 TRANSPORTING, SPREADING, AND COMPACTING

Determine the number of rollers needed to obtain the specified density and surface finish.

39-3 METHOD CONSTRUCTION PROCESS

39-3.01 GENERAL

Section 39-3 includes specifications for HMA produced and constructed under the Method construction process.

39-3.02 ACCEPTANCE CRITERIA

39-3.02A Testing

HMA Acceptance—Method Construction Process

Quality characteristic	Test method	HMA type			
		A	B	RHMA-G	OGFC
Aggregate gradation [a]	California Test 202	JMF ± tolerance [b]	JMF ± tolerance [b]	JMF ± tolerance [b]	JMF ± tolerance [b]
Sand equivalent (min) [c]	California Test 217	47	42	47	--
Asphalt binder content (%)	California Test 379 or 382	JMF±0.40	JMF±0.40	JMF ± 0.40	JMF ± 0.40
HMA moisture content (%, max)	California Test 226 or 370	1.0	1.0	1.0	1.0
Stabilometer value (min) [c]	California Test 366				
No. 4 and 3/8" gradings		30	30	--	--
1/2" and 3/4" gradings		37	35	23	--
Percent of crushed particles	California Test 205				
Coarse aggregate (% min)					
One fractured face		90	25	--	90
Two fractured faces		75	--	90	75
Fine aggregate (% min) (Passing no. 4 sieve and retained on no. 8 sieve.)					
One fractured face		70	20	70	90
Los Angeles Rattler (% max)	California Test 211				
Loss at 100 rev.		12	--	12	12
Loss at 500 rev.		45	50	40	40
Air void content (%) [c, d]	California Test 367	4 ± 2	4 ± 2	TV ± 2	--
Fine aggregate angularity (% min)[e]	California Test 234	45	45	45	--
Flat and elongated particles (% max by weight @ 5:1)	California Test 235	Report only	Report only	Report only	Report only
Voids filled with asphalt (%) [f]	California Test 367				
No. 4 grading		65.0–75.0	65.0–75.0	Report only	--
3/8" grading		65.0–75.0	65.0–75.0		
1/2" grading		65.0–75.0	65.0–75.0		
3/4" grading		65.0–75.0	65.0–75.0		
Voids in mineral aggregate (% min) [f]	California Test 367				
No. 4 grading		17.0	17.0	--	--
3/8" grading		15.0	15.0	--	
1/2" grading		14.0	14.0	18.0–23.0	
3/4" grading		13.0	13.0	18.0–23.0	
Dust proportion [f]	California Test 367				
No. 4 and 3/8" gradings		0.6–1.2	0.6–1.2	Report only	--
1/2" and 3/4" gradings		0.6–1.2	0.6–1.2		
Hamburg wheel track (minimum number of passes at 0.5 inch average rut depth)[g]	AASHTO T 324 (Modified)				
PG-58		10,000	10,000	--	--
PG-64		15,000	15,000		
PG-70		20,000	20,000		
PG-76 or higher		25,000	25,000		

Hamburg wheel track (inflection point minimum number of passes)[g] PG-58 PG-64 PG-70 PG-76 or higher	AASHTO T 324 (Modified)	 10,000 10,000 12,500 15000	 10,000 10,000 12,500 15000	--	--
Moisture susceptibility (minimum dry strength, psi)[g]	California Test 371	120	120	--	--
Moisture susceptibility (tensile strength ration, %)[g]	California Test 371	70	70	--	--
Smoothness	Section 39-1.12	12-foot straight-edge and must-grind	12-foot straight-edge and must-grind	12-foot straight-edge and must-grind	12-foot straight-edge and must-grind
Asphalt binder	Various	Section 92	Section 92	Section 92	Section 92
Asphalt rubber binder	Various	--	--	Section 92-1.01D(2) and section 39-1.02D	Section 92-1.01D(2) and section 39-1.02D
Asphalt modifier	Various	--	--	Section 39-1.02D	Section 39-1.02D
CRM	Various	--	--	Section 39-1.02D	Section 39-1.02D

[a] The Engineer determines combined aggregate gradations containing RAP under California Test 367.
[b] The tolerances must comply with the allowable tolerances in section 39-1.02E.
[c] The Engineer reports the average of 3 tests from a single split sample.
[d] The Engineer determines the bulk specific gravity of each lab-compacted briquette under California Test 308, Method A, and theoretical maximum specific gravity under California Test 309.
[e] The Engineer waives this specification if HMA contains 10 percent or less of nonmanufactured sand by weight of total aggregate. Manufactured sand is fine aggregate produced by crushing rock or gravel.
[f] Report only.
[g] Applies to RAP substitution rate greater than 15 percent.

No single test result may represent more than 750 tons or 1 day's production, whichever is less.

For any single quality characteristic except smoothness, if 2 consecutive acceptance test results do not comply with the specifications:

1. Stop production.
2. Take corrective action.
3. Take samples and split each sample into 4 parts in the Engineer's presence. Test 1 part for compliance with the specifications and submit 3 parts to the Engineer. The Department tests 1 part for compliance with the specifications and reserves and stores 2 parts.
4. Demonstrate compliance with the specifications before resuming production and placement.

39-3.03 SPREADING AND COMPACTING EQUIPMENT

Each paver spreading HMA Type A and Type B must be followed by 3 rollers as follows:

1. One vibratory roller specifically designed to compact HMA. The roller must be capable of at least 2,500 vibrations per minute and must be equipped with amplitude and frequency controls. The roller's gross static weight must be at least 7.5 tons.

2. One oscillating type pneumatic-tired roller at least 4 feet wide. Pneumatic tires must be of equal size, diameter, type, and ply. The tires must be inflated to 60 psi minimum and maintained so that the air pressure does not vary more than 5 psi.
3. One steel-tired, 2-axle tandem roller. The roller's gross static weight must be at least 7.5 tons.

Each roller must have a separate operator. Rollers must be self-propelled and reversible.

Compact RHMA-G as specified for HMA Type A and Type B except do not use pneumatic-tired rollers.

Compact OGFC with steel-tired, 2-axle tandem rollers. If placing 300 tons or more of OGFC per hour, use at least 3 rollers for each paver. If placing less than 300 tons of OGFC per hour, use at least 2 rollers for each paver. Each roller must weigh from 126 to 172 lb per linear inch of drum width. Turn the vibrator off.

39-3.04 TRANSPORTING, SPREADING, AND COMPACTING

Pave HMA in maximum 0.25-foot thick compacted layers.

If the surface to be paved is both in sunlight and shade, pavement surface temperatures must be taken in the shade.

Spread HMA Type A and Type B at the atmospheric and surface temperatures shown in the following table:

Minimum Atmospheric and Surface Temperatures

Compacted layer thickness, feet	Atmospheric, °F		Surface, °F	
	Unmodified asphalt binder	Modified asphalt binder[a]	Unmodified asphalt binder	Modified asphalt binder [a]
< 0.15	55	50	60	55
0.15–0.25	45	45	50	50

[a] Except asphalt rubber binder.

If the asphalt binder for HMA Type A and Type B is unmodified asphalt binder, complete:

1. First coverage of breakdown compaction before the surface temperature drops below 250 degrees F
2. Breakdown and intermediate compaction before the surface temperature drops below 200 degrees F
3. Finish compaction before the surface temperature drops below 150 degrees F

If the asphalt binder for HMA Type A and Type B is modified asphalt binder, complete:

1. First coverage of breakdown compaction before the surface temperature drops below 240 degrees F
2. Breakdown and intermediate compaction before the surface temperature drops below 180 degrees F
3. Finish compaction before the surface temperature drops below 140 degrees F

HMA compaction coverage is the number of passes needed to cover the paving width. A pass is 1 roller's movement parallel to the paving in either direction. Overlapping passes are part of the coverage being made and are not a subsequent coverage. Do not start a coverage until completing the prior coverage.

Start rolling at the lower edge and progress toward the highest part.

Perform breakdown compaction of each layer of HMA Type A, Type B, and RHMA-G with 3 coverages using a vibratory roller. The speed of the vibratory roller in miles per hour must not exceed the vibrations per minute divided by 1,000. If the thickness of the HMA layer is less than 0.08 foot, turn the vibrator off. The Engineer may order fewer coverages if the thickness of the HMA layer is less than 0.15 foot.

Perform intermediate compaction of each layer of HMA Type A and Type B with 3 coverages using a pneumatic-tired roller at a speed not exceeding 5 mph.

Perform finish compaction of HMA Type A, Type B, and RHMA-G with 1 coverage using a steel-tired roller.

Compact OGFC with 2 coverages using steel-tired rollers.

39-4 COLD PLANING ASPHALT CONCRETE PAVEMENT

39-4.01 GENERAL

Cold planing asphalt concrete pavement includes the removal of pavement markers, traffic stripes, and pavement markings within the area of cold planing.

For locations not listed above, schedule cold planing activities so that not more than 7 days elapses between the time the pavement is cold planed and the HMA is placed.

If you do not complete placing the HMA surfacing before opening the area to traffic, you must:

1. Construct a temporary HMA taper to the level of the existing pavement
2. Place HMA during the next work shift
3. Submit a corrective action plan that shows you will complete cold planing and placement of HMA in the same work shift. Do not restart cold planing activities until the corrective action plan is authorized.

39-4.02 MATERIALS

HMA for temporary tapers must be of the same quality that is used for the HMA overlay or comply with the specifications for minor HMA in section 39.

39-4.03 CONSTRUCTION

39-4.03A General

Do not use a heating device to soften the pavement.

The cold planing machine must be:

1. Equipped with a cutter head width that matches the planing width unless a wider cutter head is authorized.
2. Equipped with automatic controls for the longitudinal grade and transverse slope of the cutter head and:
   - 2.1. If a ski device is used, it must be at least 30 feet long, rigid, and a 1-piece unit. The entire length must be used in activating the sensor.
   - 2.2. If referencing from existing pavement, the cold planing machine must be controlled by a self-contained grade reference system. The system must be used at or near the centerline of the roadway. On the adjacent pass with the cold planing machine, a joint-matching shoe may be used.
3. Equipped to effectively control dust generated by the planing operation.
4. Operated such that no fumes or smoke is produced.

Replace broken, missing, or worn machine teeth.

39-4.03B Grade Control and Surface Smoothness

Install and maintain grade and transverse slope references.

The depth, length, width, and shape of the cut must be as shown or as ordered. The final cut must result in a neat and uniform surface. Do not damage the remaining surface.

The completed surface of the planed asphalt concrete pavement must not vary more than 0.02 foot when measured with a 12-foot straightedge parallel with the centerline. With the straightedge at right angles to the centerline, the transverse slope of the planed surface must not vary more than 0.03 foot.

Where lanes are open to traffic, the drop-off between adjacent lanes must not be more than 0.15 foot.

39-4.03C Planed Material

Remove cold planed material concurrently with planing activities such that the removal does not lag more than 50 feet behind the planer.

39-4.03D Temporary HMA Tapers

If a drop-off between the existing pavement and the planed area at transverse joints cannot be avoided before opening to traffic, construct a temporary HMA taper. The HMA temporary taper must be:

1. Placed to the level of the existing pavement and tapered on a slope of 30:1 (horizontal:vertical) or flatter to the level of the planed area
2. Compacted by any method that will produce a smooth riding surface

Completely remove temporary tapers before placing permanent surfacing.

39-4.04 PAYMENT

Not used.

39-5 RESERVED

39-6 PAYMENT

Section 39-6 includes specifications for HMA payment. The weight of each HMA mixture designated in the Bid Item List must be the combined mixture weight.

If recorded batch weights are printed automatically, the bid item for HMA is measured by using the printed batch weights, provided:

1. Total aggregate and supplemental fine aggregate weight per batch is printed. If supplemental fine aggregate is weighed cumulatively with the aggregate, the total aggregate batch weight must include the supplemental fine aggregate weight.
2. Total asphalt binder weight per batch is printed.
3. Each truckload's zero tolerance weight is printed before weighing the 1st batch and after weighing the last batch.
4. Time, date, mix number, load number, and truck identification is correlated with a load slip.
5. Copy of the recorded batch weights is certified by a licensed weighmaster and submitted to the Engineer.

The Department does not adjust the unit price for an increase or decrease in the tack coat quantity. Section 9-1.06 does not apply to tack coat.

Place hot mix asphalt dike of the type specified is measured along the completed length.

Place hot mix asphalt (miscellaneous areas) is measured as the in-place compacted area.

HMA dike is paid for as place hot mix asphalt dike of the type specified in the Bid Item List and by weight for hot mix asphalt.

HMA specified to be placed in miscellaneous areas is paid for as place hot mix asphalt (miscellaneous area) and by weight for hot mix asphalt.

If minor hot mix asphalt is paid by area, it is measured from the dimensions shown.

Payment for tack coat for minor HMA is included in payment for minor hot mix asphalt or the bid item that requires minor HMA.

Payment for tack coat for miscellaneous areas is included in payment for the hot mix asphalt used in miscellaneous areas.

Geosynthetic pavement interlayer is measured for the actual pavement area covered.

If the dispute resolution independent third party determines the Department's test results are correct, the Engineer deducts the independent third party's testing costs from payments. If the independent third party determines your test results are correct, the Department pays the independent third party's testing costs.

^^

DIVISION VI STRUCTURES

47 EARTH RETAINING SYSTEMS

Add to the end of the 1st sentence in section 47-1.01:

including soldier beam pile retaining walls.

Add to section 47-1.01:

The earth retaining wall system shown consists of cast-in-drilled-hole (CIDH) concrete piers with embedded soldier beams (soldier piling) and precast concrete lagging.

Replace the 1st paragraph in section 47-1.02 with:

For the CIDH concrete piers refer to Section 49-3.02. For the steel soldier beam piling refer to Section 49-4. For the precast concrete lagging refer to Section 51-1.02B. For additional details refer to the drawings including things that may not be covered in these specifications.

Replace the 1st paragraph in section 47-1.04 with:

Soldier pile retaining wall quantity is the measured square footage of the outer wall face lagging. A wall segment is defined as the length between piers measured from centerline of each pier. The wall face area is measured as the average height of each wall segment multiplied by the length of the wall segment. The average height of a wall segment is the average vertical length measured from the top of the topmost lagging member to the bottom of the bottom most lagging member at each end of the wall segment.

Replace the 6th paragraph in section 47-2.02A with:

Rock for rock slope protection at drain pipe outlets must be small-rock slope protection and must comply with the gradation specified for 7-inch-thick layer in section 72-4.02 unless shown otherwise.

^^

49 PILING

Replace Reserved paragraph in section 49-2.03A(2) with:

Steel piling is also referred to as steel soldier beams as shown.

Replace the 2nd paragraph in section 49-2.03B with:

Steel piling must be installed in full lengths. Splicing will not be allowed.

Replace section 49-2.03C with:

Steel piling (“soldier beams”) must be fabricated to the appropriate lengths, then primed and finish painted then delivered to the site. Splices are not allowed. Field cutting is not allowed unless otherwise approved.

Delete section 49-3.02A(4)(d).

Replace the 1st paragraph in section 49-3.02B(2) with:

Concrete for cast-in-drilled-holes (CIDHs) must generally conform to the requirements of Section 51. Concrete strength shall be 2,500 psi. A pumpable mix is acceptable.

Add to section 49-3.02B(6)(c):

The synthetic slurry must be one of the materials shown in the following table:

Material	Manufacturer
SlurryPro CDP	KB INTERNATIONAL LLC 735 BOARD ST STE 209 CHATTANOOGA TN 37402 (423) 266-6964
Super Mud	PDS CO INC 105 W SHARP ST EL DORADO AR 71731 (870) 863-5707
Shore Pac GCV	CETCO CONSTRUCTION DRILLING PRODUCTS 2870 FORBS AVE HOFFMAN ESTATES IL 60192 (800) 527-9948
Terragel or Novagel Polymer	GEO-TECH SERVICES LLC 220 N. ZAPATA HWY STE 11A-449A LAREDO TX 78043 (210) 259-6386

Use synthetic slurries in compliance with the manufacturer's instructions. Synthetic slurries shown in the above table may not be appropriate for a given job site.

Synthetic slurries must comply with the Department's requirements for synthetic slurries to be included in the above table. The requirements are available from the Offices of Structure Design, P.O. Box 168041, MS# 9-4/11G, Sacramento, CA 95816-8041.

SlurryPro CDP synthetic slurry must comply with the requirements shown in the following table:

SlurryPro CDP

Quality characteristic	Test method	Requirement
Density During drilling (pcf) Before final cleaning and immediately before placing concrete (pcf)	Mud weight (density), API RP 13B-1, section 4	 ≤ 67.0[a] ≤ 64.0[a]
Viscosity During drilling (sec/qt) Before final cleaning and immediately before placing concrete (sec/qt)	Marsh funnel and cup. API RP 13B-1, section 6.2	 50–120 ≤ 70
pH	Glass electrode pH meter or pH paper	6.0–11.5
Sand content, percent by volume Before final cleaning and immediately before placing concrete (%)	Sand, API RP 13B-1, section 9	≤ 0.5

NOTE: Slurry temperature must be at least 40 °F when tested.

[a]If authorized, you may use slurry in salt water. The allowable density of slurry in salt water may be increased by 2 pcf.

Super Mud synthetic slurry must comply with the requirements shown in the following table:

Super Mud

Quality characteristic	Test method	Requirement
Density During drilling (pcf) Before final cleaning and immediately before placing concrete (pcf)	Mud weight (density), API RP 13B-1, section 4	 ≤ 64.0[a] ≤ 64.0[a]
Viscosity During drilling (sec/qt) Before final cleaning and immediately before placing concrete (sec/qt)	Marsh funnel and cup. API RP 13B-1, section 6.2	 32–60 ≤ 60
pH	Glass electrode pH meter or pH paper	8.0–10.0
Sand content, percent by volume Before final cleaning and immediately before placing concrete (%)	Sand, API RP 13B-1, section 9	≤ 0.5

NOTE: Slurry temperature must be at least 40 °F when tested.
[a]If authorized, you may use slurry in salt water. The allowable density of slurry in salt water may be increased by 2 pcf.

Shore Pac GCV synthetic slurry must comply with the requirements shown in the following table:

Shore Pac GCV

Quality characteristic	Test method	Requirement
Density During drilling (pcf) Before final cleaning and immediately before placing concrete (pcf)	Mud weight (density), API RP 13B-1, section 4	 ≤ 64.0[a] ≤ 64.0[a]
Viscosity During drilling (sec/qt) Before final cleaning and immediately before placing concrete (sec/qt)	Marsh funnel and cup. API RP 13B-1, section 6.2	 33–74 ≤ 57
pH	Glass electrode pH meter or pH paper	8.0–11.0
Sand content, percent by volume Before final cleaning and immediately before placing concrete (%)	Sand, API RP 13B-1, section 9	≤ 0.5

NOTE: Slurry temperature must be at least 40 °F when tested.
[a]If authorized, you may use slurry in salt water. The allowable density of slurry in salt water may be increased by 2 pcf.

Terragel or Novagel Polymer synthetic slurry must comply with the requirements shown in the following table:

Terragel or Novagel Polymer

Quality characteristic	Test method	Requirement
Density During drilling (pcf) Before final cleaning and immediately before placing concrete (pcf)	Mud weight (density), API RP 13B-1, section 4	 ≤ 67.0[a] ≤ 64.0[a]
Viscosity During drilling (sec/qt) Before final cleaning and immediately before placing concrete (sec/qt)	Marsh funnel and cup. API RP 13B-1, section 6.2	 45–104 ≤ 104
pH	Glass electrode pH meter or pH paper	6.0–11.5
Sand content, percent by volume Before final cleaning and immediately before placing concrete (%)	Sand, API RP 13B-1, section 9	≤ 0.5

NOTE: Slurry temperature must be at least 40 °F when tested.
[a]If authorized, you may use slurry in salt water. The allowable density of slurry in salt water may be increased by 2 pcf.

Replace section 49-3.02(C)(1) with:

Not used.

Add to the 7th paragraph in section 49-3.02(C)(2):

A few inches of loose material at the bottom of the drilled hole is acceptable.

Add to section 49-3.02(C)(3):

The possible need for temporary casing must be discussed with the Soils Engineer during the preconstruction meeting.

Replace section 49-3.02(C)(8) with:

Concrete placement in the drilled pier holes must occur as soon as possible after the hole is drilled. In no case shall it be on the next day. Thoroughly protect drilled holes from workers or the public from falling in. Comply with applicable OSHA standards for this issue. Concrete must be placed using a pump and hose or pumper pipe positioned such that the discharge from the hose or pipe is roughly at the surface of the wet concrete.

Replace the 1st paragraph of section 49-3.02D with:

Payment quantity for CIDH piles is the vertical measurement from the bottom of the drilled hole to the top of the concrete as shown. Furnishing and placing the reinforcement and concrete, but not limited to, is considered incidental to the CIDH bid item. Steel soldier beams are paid for separately, see section 49-4.04.

Add to section 49-4.02:

Concrete for steel soldier piles must generally conform to the requirements of Section 51. Concrete strength must be 2,500 psi. A pumpable mix is acceptable.

Add to section 49-4.03B:

If rock subsurface foundation material is anticipated at the soldier pile retaining wall location. Conventional drilling equipment for drilling in soils may not be suitable for drilling holes for the steel soldier piling.

If you substitute piles with a larger diagonal dimension for the piles shown, ream or enlarge the drilled hole to provide a hole diameter at least 4 inches larger than the diagonal dimension of the pile.

Add to section 49-4.03B:

A few inches of loose material at the bottom of the drilled hole is acceptable.

The possible need for temporary casing must be discussed with the Soils Engineer during the preconstruction meeting.

Concrete placement in the drilled pier holes must occur as soon as possible after the hole is drilled. In no case shall it be on the next day. Thoroughly protect drilled holes from workers or the public from falling in. Comply with applicable OSHA standards for this issue. Concrete must be placed using a pump and hose or pumper pipe positioned such that the discharge from the hose or pipe is roughly at the surface of the wet concrete.

Add to section 49-4.03:

49-4.03D Cleaning and Painting

Steel soldier beams for the retaining wall must be cleaned, primed and finish painted as follows:

1. Steel must be thoroughly cleaned by steam cleaning per Section 59-1.03C(4). All dirt, grease, loose paint or chalk and other foreign material must be completely removed.
2. General coating of these structural steel members must conform to Section 59 of the Caltrans Standard Specifications with the following provisions.
3. Priming and painting must conform to Section 59-1.03D.
4. Paint materials, including both primer and top coat, must conform to Section 91 of the Caltrans Standard Specifications. The finished color must be selected by the Owner.

Replace the 1st paragraph of section 49-4.04 with:

Payment quantity for steel soldier beam piles is the length of the structural shape installed.

^^

51 CONCRETE STRUCTURES

Add to the 2nd paragraph of section 51-1.01A:

10. Bridge footings including abutments and wingwalls.
11. PC soldier pile wall lagging.

Replace the 6th item in the 6th paragraph of section 51-1.01A with:

6. PC concrete members including, but not limited to, lagging for soldier pile wall.

Add to the 6th paragraph of section 51-1.01A:

9. Foot bridge deck slab.
10. Bridge footings including abutments, wingwalls and CIDH piers.

Add to section 51-1.01A:

The following list are the applicable standards and specifications:

1. American Society for Testing Materials, (ASTM).
2. American Concrete Institute, (ACI)
3. Concrete Reinforcing Steel Institute, (CRSI)

See section 73 for concrete walkway paving and walkway thickened edge, overlook paving and overlook thickened edge.

Add to section 51-1.01B:

defective work: Refers to concrete having insufficient strength, concrete placed out of like, level or plumb, as defined by ACI standards, or concrete containing significant cracks, spalls rock pockets or voids, or exposed reinforcing steel.

Add to the end of section 51-1.01C(1):

Submit the following to the OR for approval:

1. Concrete mix designs for all concrete work.
2. Reinforcing steel shop drawings for bridge abutments including the reinforcement for the CIDH.
3. Test panel surface texture for the concrete bridge.

Replace the 1st sentence of section 51-1.01D(2) with:

Owner will provide on-site inspection of concrete forms and reinforcing steel and preparation for all concrete placements. Coordinate inspections with OR.

Manufacturer Qualifications: The concrete must be provided by a firm experienced in manufacturing ready-mixed concrete products and that complies with ASTM C 94/C 94M requirements for production facilities and equipment.

Replace section 51-1.02B with:

Concrete materials must conform to ASTM C 94 “Standard Specifications for Ready-mix Concrete”. The specific mix design selection will be the responsibility of the Contractor and must be submitted to the Engineer for review and approval. The mix designs must meet the following strength and w/c requirements:

1. Concrete for retaining wall piers: Strength: 3,000 psi min. w/c ratio 0.55 max.
2. Concrete for bridge abutment support piers: Strength: 3,500 psi min. w/c ratio 0.55 max.
3. Concrete for bridge abutment: Strength: 3,500 psi min. w/c ratio 0.55 max.
4. Concrete for bridge deck: Strength: 3,500 psi min. w/c ratio 0.45 max.
5. Concrete for precast retaining wall lagging: Strength: 4,000 psi min. w/c ratio 0.55 max.

Replace the 1st paragraph of section 51-1.03A with:

Mixing and placement of concrete must conform to ACI requirements and Section 1905 of the CBC. Vibrate concrete to insure thorough compaction. (Vibration not required for retaining wall concrete piers).

Add to section 51-1.03D(4):

At cold joint between top of bridge support piers and bottom of bridge abutment chipping away loose concrete and hand wire brushing will be adequate. Abrasive blast cleaning will not be necessary.

Add to the 1st paragraph of section 51-1.03F(2):

Apply the Ordinary Surface Finish to all concrete structures with the exception of the bridge deck surface. The bridge deck surface must be broom finish perpendicular to the path of travel to match what is required for site concrete walkways.

Replace section 51-1.04 with:

Payment quantity for structural concrete is the measured volume of the finished constructed structure and includes, but not limited to, excavation, reinforcement, structural backfill, and concrete.

Replace section 51-3.01A with:

Bearing pads at the ends of the bridge must be as provided by the bridge manufacturer. Installation must be in conformance with the manufacturer's instructions.

Add to section 51-4.02D(6):

Precast concrete lagging must have an ordinary troweled finish in accordance with section 51-1.02F(2) and must be cured in accordance with section 51-1.03H. The exposed surface of this retaining wall must have an anti-graffiti coating, see section 78.

Replace the 3rd paragraph of section 51-4.04 with:

The payment for PC lagging is included in the payment for Retaining wall (Soldier Pile Wall), see section 47-1.

Replace the 5th paragraph of section 51-1.03F(3) with:

Finish areas not complying with the Class 1 surface finish requirements using a neat cement wash or with a brush coat or surface film of thin cement mortar composed of one part portland cement and one part fine sand that will pass through a No. 16 sieve.

Replace the 2nd paragraph of section 51-7.01A with:

Drainage inlets, sidewalk cross drains, pipe headwalls, endwalls, junction boxes, and manholes are classified as minor structures.

Replace the 1st paragraph of section 51-7.01B with:

Concrete must comply with the specifications for minor concrete, except the following:

1. Minor Concrete must contain at least 590 pounds of cementitious material per cubic yard.
2. The maximum aggregate size must not be larger than 1 inch or smaller than 3/4 inch.

Replace the 2nd paragraph of section 51-7.01C with:

Unless otherwise specified on the plans, do not use precast inlet structures except for precast inlet tops as allowed by various County Standard Plans.

Add to section 51-7.01C:

When a drainage inlet is constructed in two or more segments, with a construction joint at the pavement subgrade, and the portion of the inlet above the joint is constructed monolithically with the curb and sidewalk, the concrete for the upper portion of the inlet must be the same class as is used for the curb and sidewalk.

Plastic drainage inlet markers must be installed on all newly constructed drainage inlets. Drainage inlet markers will be furnished by the Engineer. Mechanically clean the concrete surface before placing plastic drainage inlet markers. Apply a sufficient amount of Sika 11 polyurethane based elastomeric adhesive or approved equal around the perimeter of the marker itself to assure that there are no loose edges around the marker when it is attached to the inlet.

Replace the 2nd paragraph of section 51-7.01D with:

Metal frames and covers or frames and grates are included in the payment for minor structures.

Add to section 51-7.01D:

The payment quantity for drainage inlet is each measured by the unit from actual count.

Payment for connecting a drainage inlet to an existing pipe is included in the payment of the drainage inlet that requires it.

^^

52 REINFORCEMENT

Replace the 1st paragraph of section 52-1.02B with:

Reinforcing steel must conform to ASTM A615, Grade 60 for #5 bars and larger and either Grade 40 or 60 for #3 and #4 bars. All reinforcing must be free from rust, oil, dirt or any other coating that will reduce its bond strength. Securely support and anchor all reinforcing steel to avoid displacement. Reinforcing bars must be lapped 40 diameters at splices.

Replace the 1st paragraph of section 52-1.03A with:

Reinforcing steel must be detailed, handled and placed in accordance with CBC Section 1907 and in conformance with CRSI "Manuel of Standard Practice".

Securely support and anchor reinforcing steel to avoid movement during placement of concrete.

Bars must be continuous, or lap spliced as specified. Unless otherwise specified, reinforcing bars must be lapped 48 bar diameters at splices.

Coordinate with the OR to inspect reinforcing steel installation on-site prior to placement of concrete. The OR must be present with the inspector to observe and approve all formwork prior to the concrete placement.

Replace section 52-1.04 with:

Payment for all reinforcement is included in the payment for the applicable contract items.

^^^

55 STEEL STRUCTURES

Add to section 55-1.01A:

Furnishing prefabricated steel bridge includes fabricating and delivering bridge and all necessary appurtenances to the job site ready to set on abutments.

Erecting prefabricated steel bridge includes completely installing bridge in place on abutments leaving only placing bridge decking to put bridge in service.

Add to section 55-1.01C(2):

Submit shop drawings and structural calculations for final bridge design to OR for review and approval.

Replace section 55-1.04 with:

Payment quantity for furnishing prefabricated steel bridge is lump sum and includes, but not limited to, fabricated bridge and all appurtenances delivered to job site and ready for installation.

Payment quantity for erecting prefabricated steel bridge is lump sum and includes, but not limited to, completely installing bridge on abutments and ready for service except for the bridge decking.

^^^

56 OVERHEAD SIGN STRUCTURES, STANDARDS, AND POLES

Add to the end of the 1st sentence of section 56.1.01B:

and pedestrian barricade bollards.

Replace section 56-4 with:

56-4 REMOVE PEDESTRIAN BARRICADE BOLLARD

56-4.01 GENERAL

Section 56-4 includes specifications for removing pedestrian barricade bollards.

56-4.02 MATERIALS

Not used.

56-4.03 CONSTRUCTION

Completely remove pedestrian barricade bollard including foundation and anchor as shown.

56-4.04 PAYMENT

Not used.

^^

DIVISION VII DRAINAGE FACILITIES

64 PLASTIC PIPE

Add to the end of the 1st sentence in section 64-1.01A:

and includes furnishing and installing outlet check valve.

Replace the 1st paragraph of section 64-2.02A with:

Plastic storm drain pipe must be Type S corrugated high density polyethylene pipe with smooth interior and with water-tight joints. All references to corrugated interior walled plastic pipe are deleted. All corrugated plastic pipe must have smooth interior walls regardless of the material type.

Delete *Type C* at the beginning of section 64-2.02C.

Add to section 64-2.02E:

All spigot ends of each pipe section must have the “home” position clearly marked around the circumference such that the Engineer can easily determine from the top of the trench that the pipe has been sufficiently seated into the bell end of the adjoining pipe section.

Replace section 64-2.02F with:

64-2.02F Outlet Check Valves

Outlet check valves must be Tideflex® TF-1 or approved equal.

Delete the 4th item of the 5th paragraph of section 64-2.03C.

Add to section 64-2.03C:

Installed pipe must be tested to ensure that vertical deflections for plastic pipe do not exceed the maximum allowable deflection. Maximum allowable deflections will be governed by the mandrel requirements stated herein and must nominally be:

1. Three percent of the maximum average ID for PVC Pipe.
2. Five percent of the maximum average ID for polyethylene pipe.

The maximum average ID must be equal to the average OD per applicable ASTM Standard minus two minimum wall thickness per applicable ASTM Standards. Manufacturing and other tolerances will not be considered for determining maximum allowable deflections. Deflection tests must be performed not sooner than 30 days after completion of placement and compaction of backfill. The pipe must be cleaned and inspected for offsets and obstructions prior to testing.

For all pipes 24 inches ID or smaller, supply a mandrel to be pulled through the pipe by hand to ensure that maximum allowable deflections have not been exceeded. Prior to use, the mandrel must be certified by the Engineer. Use of an uncertified mandrel or a mandrel altered or modified after certification will invalidate the test. If the mandrel fails to pass, the pipe will be deemed to be overdeflected.

Unless otherwise permitted by the Engineer, any overdeflected pipe must be uncovered and, if not damaged, reinstalled. Damaged pipe must not be reinstalled, but must be removed from the project site. Any pipe subjected to any method or process other than removal, which attempts, even successfully, to reduce or cure any overdeflection, must be uncovered, removed from the project site, and replaced with new pipe.

The mandrel must:

1. Be a rigid, nonadjustable, odd-numbered-leg (9 legs minimum) mandrel having an effective length not less than its nominal diameter.
2. Be fabricated of steel, be fitted with pulling rings at each end, be stamped or engraved on some segment other than a runner indicating the pipe material specification, nominal size, and mandrel OD (e.g., PVC, D 3034-8 inches – 7.366 inches; ABS Composite D 2680-10 inches – 9.584 inches); and be furnished in a suitable carrying case labeled with the same data as stamped or engraved on the mandrel.

The maximum average ID must be measured in the field prior to installation. For pipe ID's nominally greater than 24 inches to 36 inches, deflections must be determined by a method submitted to and approved. If a mandrel is selected, the minimum diameter, length and other requirements must conform to the dimensions and requirements as stated above. Deflection measurement for ID's nominally larger than 36 inches will be determined using a 1 inch diameter rigid, Agency certified, nonadjustable metal bar; a minimum radius rigid template; or by another approved method.

Specified curves must be accomplished by a series of prefabricated elbows with tangent sections of pipe to duplicate the centerline radius of each pipe. Elbows must be 22.5 degrees maximum and pipe ends must be manufactured at the plant with no field cutting allowed.

Add to section 64-2.03:

64-2.03D Outlet Check Valve Installation

Install outlet check valve to comply with manufacturer's recommendations and requirements.

Add to the end of the list in the 1st paragraph of section 64-2.04:

4. Includes excavation, backfill, and restoring surface in kind or as shown unless bid items are listed.

Payment quantity for Tideflex© TF-1 Check Valve is each measured by the unit from actual count.

^^

65 CONCRETE PIPE

Replace *Reserved* in section 65-2.03A with:

Install reinforced concrete pipe in conformance with County Standard Plan CD01 unless shown otherwise.

^^

71 EXISTING DRAINAGE FACILITIES

Replace the 2nd sentence in section 71-2.03 with:

Except for concrete pipe, concrete drainage inlets, and concrete manholes, removing PCC components must comply with section 15-1.03B.

Add to the end of section 71-2.04:

The payment quantity for Remove Storm Drain is the measured length of storm drain pipe removed. Payment for the removal of drainage inlets and catch basins is included in the payment for Remove Storm Drain.

Replace *Reserved* in section 71-6.02 with:

71-6.02A General

Abandon manholes as shown.

71-6.02B Material

Not Used

71-6.02C Construction

Not Used

71-6.02D Payment

Remove and reuse manhole frames and covers at the locations shown. Payment for removing and reusing frames and covers is included in the payment for abandon manhole.

Payment for salvaging manhole frames and covers is included in the payment for abandon manhole.

Replace *Reserved* in section 71-6.03 with:

71-6.03A General

Abandon culverts or pipelines by removing portions of the culverts or pipelines, filling the inside, and backfilling the depressions and trenches to grade. As an alternative to abandoning a culvert or pipeline, you may remove the culvert or pipeline, dispose of it, and backfill.

Notify the Engineer before abandoning a culvert or pipeline.

71-6.03B Materials

Openings into existing structures that are to remain in place must be plugged with minor concrete under section 90.

71-6.03C Construction

Wherever culverts or pipelines intersect side slopes, remove them to a depth of at least 3 feet. Measure the depth normal to the plane of the finished side slope. Abandon the remaining portion of the culvert or pipeline.

Culverts or pipelines that are 12 inches or more in diameter must be completely filled by authorized methods. Backfill with sand that is clean, free draining, and free from roots and other deleterious substances. As an alternative to sand, you may backfill with one of the following:

1. Controlled low-strength material under section 19-3.02F
2. Slurry cement backfill under section 19-3.02D

Ends of culverts and pipelines must be securely closed by a 6-inch-thick, tight-fitting plug or wall of commercial-quality concrete.

71-6.03D Payment

If backfilling inside the culvert or pipeline is required, payment for backfilling inside the culverts or pipelines is included in the payment for abandon culvert or abandon pipeline. Payment for backfilling outside the culvert or pipeline is included in the payment for abandon culvert or abandon pipeline.

If backfilling inside the culvert or pipeline is required, payment for backfilling inside the culvert or pipeline is paid for as sand backfill. Payment for backfilling outside the culvert or pipeline is included in the payment for abandon culvert or abandon pipeline.

Replace *Reserved* in section 71-6.04 with:

71-6.04A General

Abandon pipe inlets and concrete drainage inlets as shown.

71-6.04B Material

Not Used

71-6.04C Construction

The top portion of the inlets must be removed to a depth of 3 feet below finished grade.

Remove and reuse frames and grates at the locations shown.

71-6.04D Payment

Payment for removing and reusing frames and grates is included in the payment for abandon inlet.

Payment for salvaging frames and grates is included in the payment for abandon inlet.

^^

DIVISION VIII MISCELLANEOUS CONSTRUCTION

72 SLOPE PROTECTION

Replace the 1st paragraph of section 72-1.01 with:

Section 72-1 includes general specifications for constructing slope protection, rock slope protection, concrete rock slope protection, riprap trench and angular backfill.

Replace the 3rd paragraph of section 72-3.03E with:

After placing the concrete, thoroughly brush the rocks to expose the top surfaces. Outer rocks must project above the concrete by a height of 0.33-0.50 times the rock diameter. After completion of any 10-foot strip, do not allow workmen or loads on the surface for at least 24 hours or longer as ordered by the Engineer.

Replace section 72-7 with:

72-7 RIPRAP TRENCH

72-7.01 GENERAL

Section 72-7 includes specifications for installing Riprap Trench as shown.

72-7.02 MATERIALS

Salvaged Riprap: Salvaged riprap from locations as shown and as specified in section 19-4.

72-7.03 CONSTRUCTION

Use salvaged riprap to construct Riprap Trench as shown and augment with Rock Slope Protection Class II as required using Method B placement as specified in section 72.2.03C.

72-7.04 PAYMENT

The payment quantity for Rock Slope Protection (Riprap Trench) is the measured length of the constructed riprap trench. See section 72-2 for payment for Rock Slope Protection Class II required to augment salvaged riprap.

^^

73 CONCRETE CURBS AND SIDEWALKS

Add to the end of the 1st paragraph of section 73-1.01:

and includes concrete thickened edge where shown.

Add to section 73-1.01:

Concrete paving where shown must meet the specifications for concrete sidewalk.

Replace the 1st paragraph of section 73-1.02A with:

Concrete must comply with section 90-2 except as follows:

1. Concrete for curbs, sidewalks and their appurtenances, except valley gutters, must contain at least 505 pounds of cementitious material per cubic yard.
2. Concrete for valley gutters must contain at least 590 pounds of cementitious material per cubic yard.
3. The maximum aggregate size for curbs, sidewalks and their appurtenances must not be larger than 1 inch.

Add to section 73-1.02B:

Install prefabricated detectable warning surfaces under the requirements of the Department of General Services, Division of State Architect. The finished surfaces of the detectable warning surface must be free from blemishes.

The manufacturer must provide a written 5-year warranty for prefabricated detectable warning surfaces, guaranteeing replacement when there is a defect in the dome shape, color fastness, sound-on-cane acoustic quality, resilience, or attachment. The warranty period will begin upon acceptance of the contract.

Add to section 73-1.03A:

Where new curb and new sidewalk are contiguous construct monolithically.

Do not deviate the shape and design of curb ramps and driveways with sidewalk from the standard plans unless noted on the project plans or approved by the Engineer. Do not free form these facilities.

Clean all sawcuts by abrasive blasting or other method approved by the Engineer.

If new curb, sidewalk or driveway is constructed adjacent to existing curb, sidewalk or driveway, dowel the existing concrete to the new concrete with #4 reinforcing bars in accordance with County Standard Plan CA74.

Prior to final acceptance, as directed by the Engineer, water test curbs with gutters on slopes of 0.75% or flatter and paved surfaces to verify proper drainage. Any ponding of water greater than 0.25 inch depth will be considered as evidence of poor work techniques and must be corrected by removing and replacing those portions of curb and gutter as necessary to comply with the requirements of this special provision, at no additional expense to the Agency.

Replace the 1st paragraph of section 73-1.03B with:

Remove native material to a depth of 6 inches below the subgrade elevation for valley gutters and 3 inches below the subgrade elevation for sidewalks, curbs, gutter depressions, island paving, driveways and curb ramps. Backfill with Class 2 aggregate base material to produce a stable foundation.

Replace *Not Used* in section 73-1.04 with:

Payment quantity for Minor Concrete (Sidewalk) is the volume of placed concrete for concrete paving including the thickened edge and overlook concrete paving.

Payment quantity for Minor Concrete (Miscellaneous Construction) includes the volume of placed concrete for the bench pedestals and thickened edge shown for the overlook concrete paving.

Replace *Not Used* in section 73-2.04 with:

Lengths of curbs and/or gutters at drainage structures, designated as aprons and transitions on the plans, will not be measured. Constructing aprons and transitions is included in the payment of the minor concrete (minor structure).

Curb and/or gutter measurements include curb transitions and depressions along driveways and curb ramps.

Retaining curb located at the back of sidewalk is measured and paid for as minor concrete (sidewalk).

Replace the 3rd paragraph of section 73-3.03 with:

Install a prefabricated cast in place detectable warning surface under the manufacturer's instructions. Surface applied tiles or stamped into surface detectable warning surfaces will not be allowed.

Add to section 73-3.03:

At corner curb ramps place 6 inch depth of concrete within the curb radius.

Replace *Not Used* in section 73-3.04 with:

Driveways and curb ramps will be paid for as minor concrete (sidewalk).

Driveways, island paving, curb ramps, and sidewalks which are contiguous with curb will be measured from a point 6 inches behind the face of curb.

Sidewalk with retaining curb will be measured transverse from a point 6 inches behind the face of curb to the back of the retaining curb.

No deduction in quantities of minor concrete (sidewalk) will be made for utility covers and portions of inlets behind the projected back of curb line.

Add to section 73-4.02:

Colorizing by the dry powder method will be allowed, upon submittal and approval of an application method and protection scheme which protects all existing improvements and property from excess or blowing colorizing agent. The submittal must indicate the method in which the excess colorizing agent will be cleaned up at the completion of the process.

Colorizing agents must be added to the concrete at the plant. Dry powder colorizing at the job site will not be allowed.

Add to section 73-10.03:

Grind down the existing curb lip prior to installation of the surface applied detectable warning surface at existing curb ramps as shown or as directed by the Engineer. Transitions from ramps to gutters must be flush and free of abrupt changes.

Add to section 73-1.02A:

Concrete must be minor concrete complying with section 90-2 and may contain returned plastic concrete complying with section 90-9.

Add to section 73-3.01C:

Within 2 business days of performing the surveys, submit preconstruction and post-construction surveys sealed and signed by one of the following:

1. Land surveyor licensed in the State
2. Civil engineer licensed in the State before January 1, 1982

Replace *Reserved* in section 73-3.01D(3) with:

For locations shown, perform a preconstruction survey to verify that forms and site constraints will allow the design dimensioning and slope requirements to be achieved. Upon completing construction of these facilities, perform a post-construction survey and verify that design dimensioning and slope requirements were achieved. The post-construction survey must include a minimum of 3 measurements for each dimension and slope requirement shown. Individual measurements must be equally distributed across the specified slope or dimensional surface.

Add to the beginning of section 73-3.03:

Before placing concrete, verify that forms and site constraints allow the required dimensioning and slopes shown. Immediately notify the Engineer if you encounter site conditions that will not accommodate the design details. Modifications ordered by the Engineer are change order work.

^^

78 INCIDENTAL CONSTRUCTION

Add to section 78-4.06B:

Anti-graffiti coating must be American Polymer Corporation “Graffiti Solution System” (GSS) or ARMAGLAZE 9000 System or approved equal.

Provide materials that comply with local Air Quality Management District’s VOC classification.

Coatings shall meet the following requirements:

1. ASTM B117 and ASTM D714 (salt spray minimum acceptable of 8000 hours).
2. ASTM D530 (hardness).
3. ASTM D412 (tensile strength and elongation).
4. ASTM D522 (pass 3/8 inch mandrel).
5. ASTM D968 (abrasion test).
6. ASTM E96 (vapor transmission).
7. Water clear, non-yellowing, free of waxes and urethanes.
8. Non-toxic, non-flammable, biodegradable, with a PH 7 to 8.5.

9. Shall allow moisture vapor transmission.

Undercoating: Undercoating, Clear VU High Solids Base Coating (AP307); a water-based high-performance under coating used as a sealer.

Top coating: permanent anti-graffiti top coating.

Clear Finish: Clear Matte.

Graffiti Remover: non-flammable, biodegradable, with a pH 7-8.5 and recyclable, allowing graffiti removal without the use of blasting equipment, hot water, or high-pressure wash equipment.

^^^

80 FENCES

Add to Section 80-1.01:

Place new fence prior to removing any existing fence. The adjoining properties must remain secure at all times.

Do not place permanent fence along the cut/fill slope where new fence will impede your operations.

Add to section 80-10.02:

For double gates, install removable center post per Caltrans Standard Plan A85A. The removable center post will be considered a latch post within a gate unit.

^^

DIVISION IX TRAFFIC CONTROL DEVICES

83 RAILINGS AND BARRIERS

Replace item 1 in the list in the 2nd paragraph of section 83-2.02C(1)(a) with:

1. Wood line posts.

Replace item 2 in the list in the 2nd paragraph of section 83-2.02C(1)(a) with:

2. Wood blocks for line posts.

Add to the 1st paragraph of section 83-2.02C(1)(b):

If post(s) cannot be placed due to subsurface obstructions, construct guardrail array in accordance with the “Long Span Nested Guardrail” Figure 7-9 of the Caltrans Traffic Manual.

Replace *Reserved* in section 83-2.04C with:

83-2.04C(1) General

83-2.04C(1)(a) Summary

Section 83-2.04C includes specifications for constructing alternative flared terminal systems.

83-2.04C(1)(b) Definitions

Not Used

83-2.04C(1)(c) Submittals

Submit a certificate of compliance for alternative flared terminal systems.

83-2.04C(1)(d) Quality Assurance

Not Used

83-2.04C(2) Materials

Alternative flared terminal systems must be one of the following or a Department-authorized equal:

1. Type FLEAT terminal system. Type FLEAT terminal system must be a FLEAT-350 manufactured by Road Systems, Inc., located in Big Spring, Texas, and must include the connection components. The FLEAT-350 can be obtained from the following distributors:

Address	Telephone no.
UNIVERSAL INDUSTRIAL SALES PO BOX 699 PLEASANT GROVE UT 84062	(801) 785-0505
GREGORY INDUSTRIES INC 4100 13TH ST SW CANTON OH 44708	(330) 477-4800

2. Type SRT terminal system. Type SRT terminal system must be an SRT-350 Slotted Rail Terminal (8-post system) manufactured by Trinity Highway Products, LLC, and must include the connection components. The SRT-350 Slotted Rail Terminal (8-post system) can be obtained from the manufacturer:

Address	Telephone no.
TRINITY HIGHWAY PRODUCTS LLC PO BOX 99 CENTERVILLE UT 84012	(800) 772-7976

83-2.04C(3) Construction

Install alternative flared terminal systems under the manufacturer's installation instructions.

Identify each terminal system by painting the type of terminal system in 2-inch-high, neat, black letters and figures on the backside of the rail element between system posts number 4 and 5.

For Type SRT terminal systems, drive the steel foundation tubes with soil plates attached with or without pilot holes, or place them in drilled holes. Backfill the space around the foundation tubes with selected earth that is free of rock. Place the earth in 4-inch-thick layers. Moisten and thoroughly compact each layer. Coat the inside surfaces of the foundation tubes to receive wood terminal posts with grease. Insert the posts into the tubes by hand. Do not drive the posts. You may slightly round the post edges to facilitate insertion.

For Type FLEAT terminal systems, drive the steel foundation tubes with or without pilot holes, or place them in drilled holes. Backfill the space around the foundation tubes with selected earth that is free of rock. Place the earth in 4-inch-thick layers. Moisten and thoroughly compact each layer. Coat the inside surfaces of the foundation tubes to receive wood terminal posts with grease. Insert the posts into the tubes by hand. Do not drive the posts. You may slightly round the post edges to facilitate insertion.

83-2.04C(4) Payment

Not Used

^^

DIVISION XI MATERIALS

90 CONCRETE

Add to section 90-1.01C:

90-1.01C(11) Polymer Fibers

Submit fiber manufacturer's product data and instructions for use.

Submit a certificate of compliance for each shipment and type of fibers.

Replace the row for bridge deck concrete in the table in the 1st paragraph of section 90-1.02A with:

Bridge deck concrete	0.032

Add to section 90-1.02:

90-1.02K Polymer Fibers

Fibers must comply with ASTM D 7508. Microfibers must be from 1/2 to 2 inches long. Macrofibers must be from 1 to 2-1/2 inches long.

^^

$33(1',;

Dist	COUNTY	ROUTE	POST MILES TOTAL PROJECT	SHEET No.	TOTAL SHEETS

LICENSED LANDSCAPE ARCHITECT

July 21, 2017
PLANS APPROVAL DATE

LICENSED LANDSCAPE ARCHITECT
Michael C. Ferrara
Signature
9-30-17
Renewal Date
Date
STATE OF CALIFORNIA

THE STATE OF CALIFORNIA OR ITS OFFICERS OR AGENTS SHALL NOT BE RESPONSIBLE FOR THE ACCURACY OR COMPLETENESS OF SCANNED COPIES OF THIS PLAN SHEET.

TO ACCOMPANY PLANS DATED _____

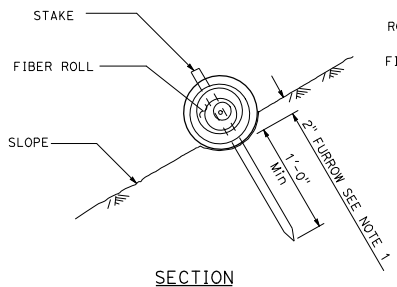

SECTION

FIBER ROLL (TYPE 1)

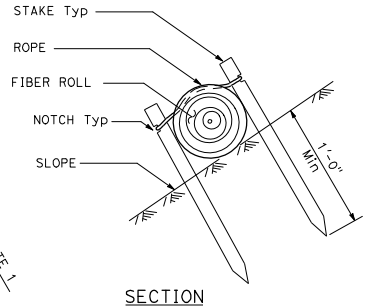

SECTION

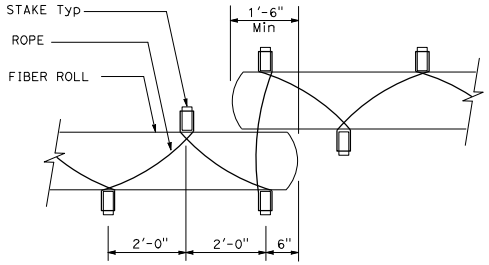

PLAN

FIBER ROLL (TYPE 2)

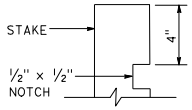

ELEVATION

STAKE NOTCH DETAIL

NOTE:

1. Installations shown in the perspectives are for slope inclination of 10:1 (Horiz:Vert) and steeper.

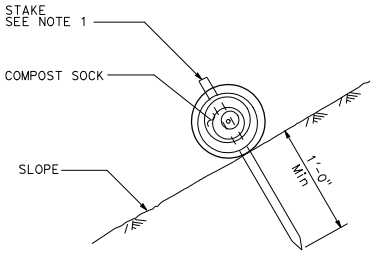

SECTION

COMPOST SOCK

NOTE:

1. May install stake adjacent to bottom edge of compost sock.

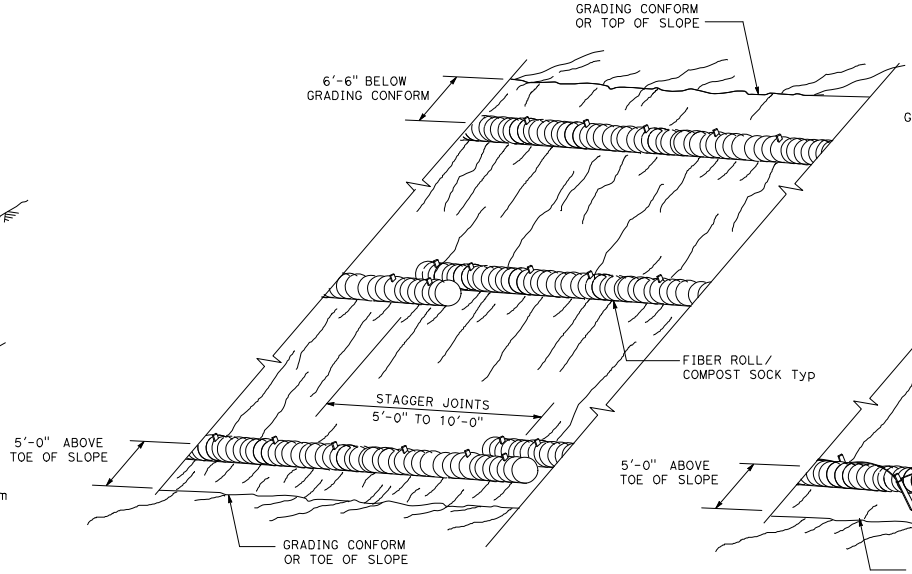

PERSPECTIVE

FIBER ROLL (TYPE 1)
COMPOST SOCK

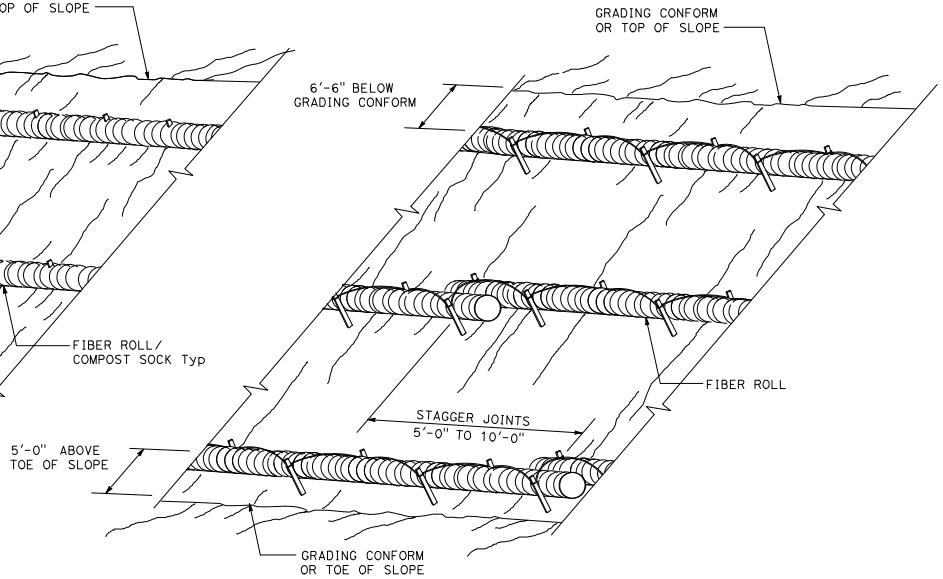

PERSPECTIVE

FIBER ROLL (TYPE 2)

STATE OF CALIFORNIA
DEPARTMENT OF TRANSPORTATION

EROSION CONTROL DETAILS
FIBER ROLL AND COMPOST SOCK

NO SCALE

RSP H51 DATED JULY 21, 2017 SUPERSEDES STANDARD PLAN H51
DATED OCTOBER 30, 2015 - PAGE 240 OF THE STANDARD PLANS BOOK DATED 2015.

REVISED STANDARD PLAN RSP H51

2015 REVISED STANDARD PLAN RSP H51

5-25-17

Dist	COUNTY	ROUTE	POST MILES TOTAL PROJECT	SHEET No.	TOTAL SHEETS

REGISTERED CIVIL ENGINEER

July 21, 2017
PLANS APPROVAL DATE

REGISTERED PROFESSIONAL ENGINEER W. Reza Valizadeh No. C51902 Exp. 6-30-18 CIVIL STATE OF CALIFORNIA

THE STATE OF CALIFORNIA OR ITS OFFICERS OR AGENTS SHALL NOT BE RESPONSIBLE FOR THE ACCURACY OR COMPLETENESS OF SCANNED COPIES OF THIS PLAN SHEET.

TO ACCOMPANY PLANS DATED _____

NOTES:

1. B is not less than 3 times maximum cross section of post with minimum of 8".
2. See Revised Standard Plan RSP A85 for Chain Link Fencing dimensions.
3. See Detail A on Standard Plan A86B for connection at headwall.
4. See Detail D on Standard Plan A86B for connection at headwall.

CENTER POST		
FENCE HEIGHT (Max)	SLATTED	D
ALL HEIGHTS	NO	1'-6"
5'-0"	YES	3'-0"
6'-0"	YES	3'-0"
8'-0"	YES	3'-6"
10'-0"	YES	4'-0"

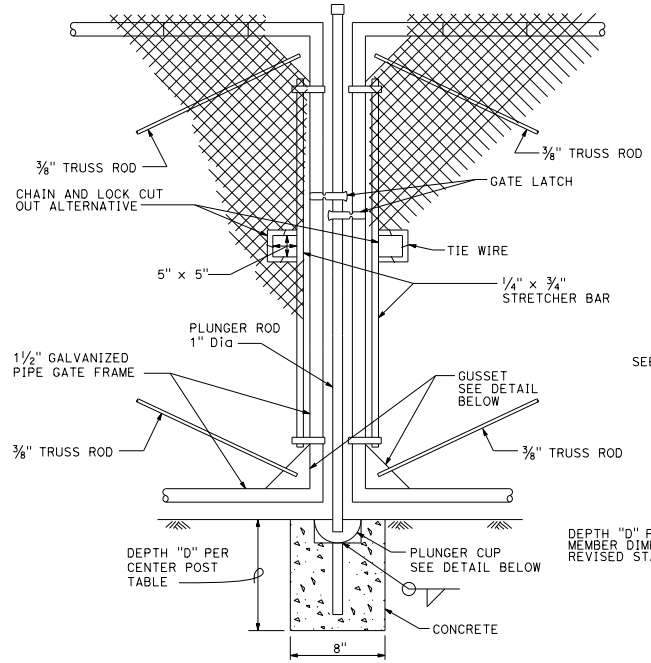

DOUBLE GATE REMOVABLE CENTER POST

Each gate maximum width is 12'-0"

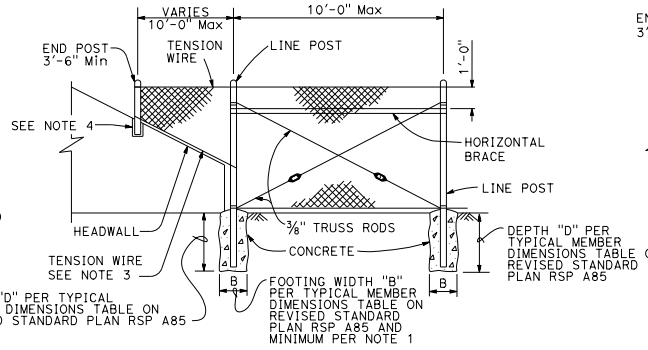

METHOD OF TYING FENCE TO HEADWALL

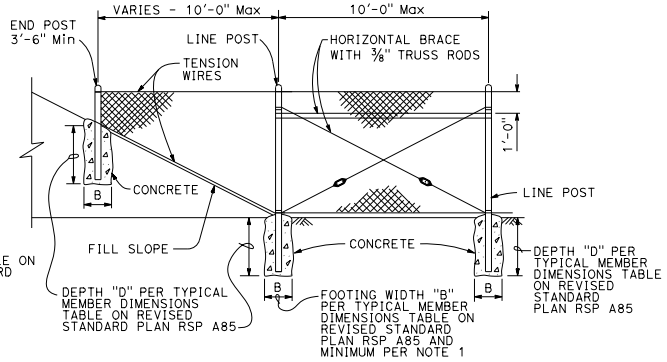

METHOD OF ERECTING FENCE FOR FILL SLOPE

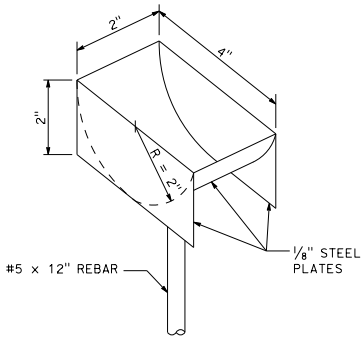

PLUNGER CUP DETAIL

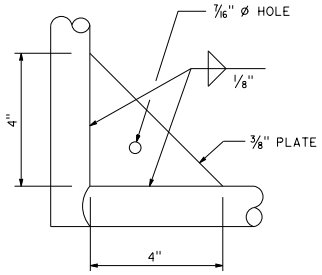

GUSSET DETAIL

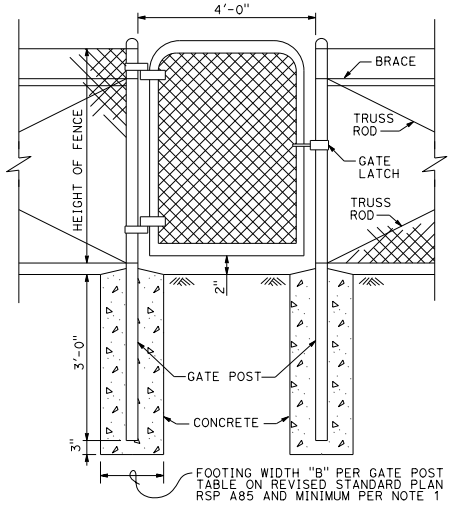

WALK GATE

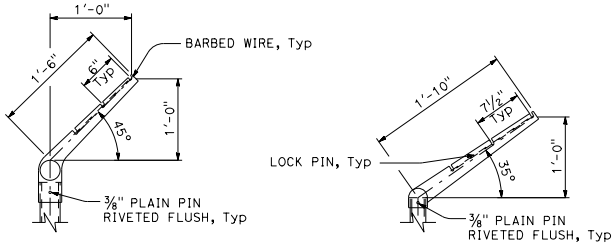

LINE POST

CORNER POST

BARBED WIRE POST TOP

STATE OF CALIFORNIA
DEPARTMENT OF TRANSPORTATION

CHAIN LINK FENCE DETAILS

NO SCALE

RSP A85A DATED JULY 21, 2017 SUPERSEDES RSP A85A DATED JANUARY 20, 2017 AND RSP A85A DATED JULY 15, 2016 AND STANDARD PLAN A85A DATED OCTOBER 30, 2015 - PAGE 118 OF THE STANDARD PLANS BOOK DATED 2015.

REVISED STANDARD PLAN RSP A85A

2015 REVISED STANDARD PLAN RSP A85A

5-5-17

Dist	COUNTY	ROUTE	POST MILES TOTAL PROJECT	SHEET No.	TOTAL SHEETS

REGISTERED CIVIL ENGINEER

July 21, 2017
PLANS APPROVAL DATE

M. Reza Valizadeh
No. C51902
Exp. 6-30-18
CIVIL
STATE OF CALIFORNIA
REGISTERED PROFESSIONAL ENGINEER

THE STATE OF CALIFORNIA OR ITS OFFICERS OR AGENTS SHALL NOT BE RESPONSIBLE FOR THE ACCURACY OR COMPLETENESS OF SCANNED COPIES OF THIS PLAN SHEET.

TO ACCOMPANY PLANS DATED _____

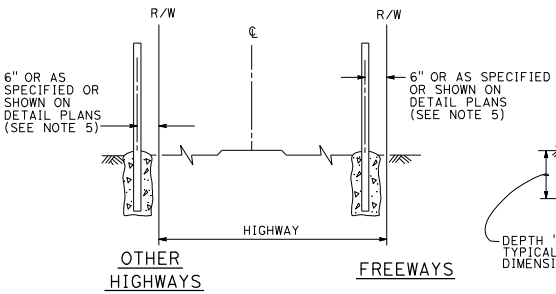

FENCE LOCATION

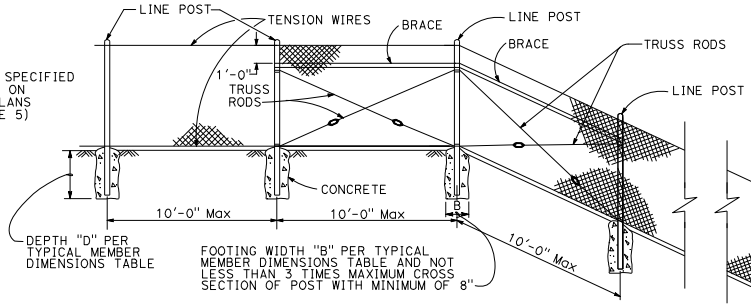

CHAIN LINK FENCE ON SHARP BREAK IN GRADE

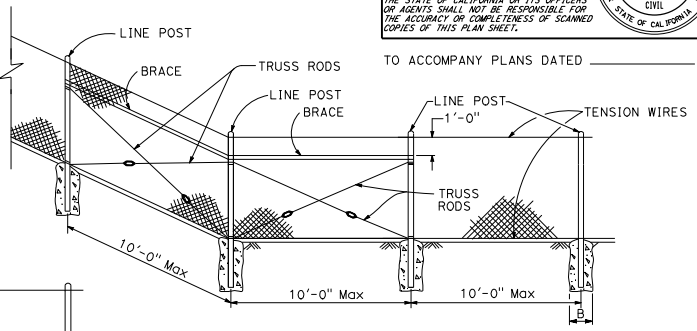

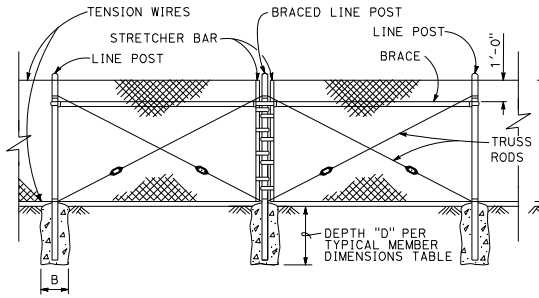

BRACED LINE POST INSTALLATION

Braced line post at intervals not exceeding 1000'

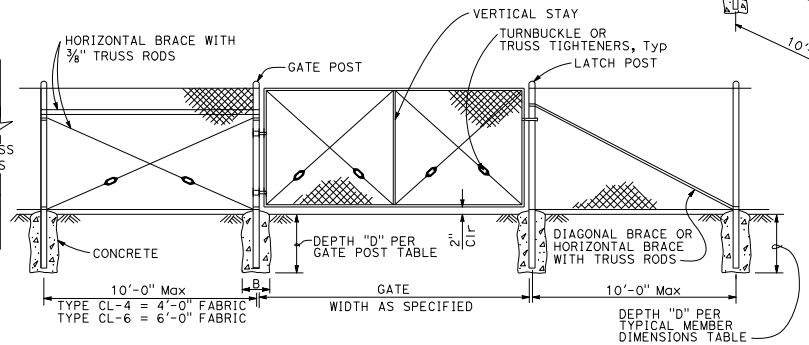

CHAIN LINK GATE INSTALLATION

Maximum Gate Width is 12'-0"
Vertical Stay is required in middle of gate greater than 8'-0" in width.

GATE POST						
FENCE HEIGHT (Max)	SLATTED	B (in)	D (ft)	ROUND PIPE		
				SECTION	ROUND OD PIPE	WEIGHT (lb/ft)
5'-0"	NO	12"	2'-6"	3 Std	3.50"	7.58
6'-0"	NO	12"	2'-6"	3 Std	3.50"	7.58
8'-0"	NO	12"	3'-0"	3 Std	3.50"	7.58
10'-0"	NO	14"	3'-6"	3 Std	3.50"	7.58
5'-0"	YES	12"	3'-0"	3½ Std	4.00"	9.12
6'-0"	YES	14"	3'-6"	4 Std	4.50"	10.80
8'-0"	YES	18"	3'-6"	5 Std	5.56"	14.60
10'-0"	YES	20"	4'-0"	6 Std	6.63"	19.00

Above post dimensions and weights are minimums.
Larger sizes may be used upon approval.

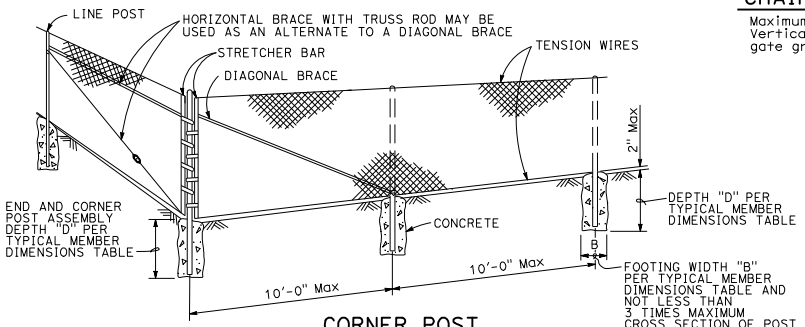

CORNER POST

TYPICAL MEMBER DIMENSIONS (See Notes)													
FENCE HEIGHT (Max)	SLATTED	B (in)	D (ft)	LINE POSTS					BRACES				
				ROUND PIPE			ROLL FORMED		ROUND PIPE			ROLL FORMED	
				SECTION	ROUND OD PIPE	WEIGHT (lb/ft)	SECTION	WEIGHT (lb/ft)	SECTION	ROUND OD PIPE	WEIGHT (lb/ft)	SECTION	WEIGHT (lb/ft)
5'-0"	NO	8"	2'-6"	1½ Std	1.90"	2.72	1.875" x 1.625"	1.85	1½" Std	1.90"	2.72	1.625" x 1.250"	1.35
6'-0"	NO	10"	2'-6"	2 Std	2.38"	3.66	1.875" x 1.625"	2.40	2 Std	2.38"	3.66	1.625" x 1.250"	1.35
8'-0"	NO	12"	3'-0"	2½ Std	2.88"	5.80	3.250" x 2.500"	4.50	2 Std	2.38"	3.66	1.625" x 1.250"	1.35
10'-0"	NO	14"	3'-6"	3 Std	3.50"	7.58	3.250" x 2.500"	4.50	2½ Std	2.88"	5.80	1.625" x 1.250"	1.35
5'-0"	YES	12"	3'-0"	3½ Std	4.00"	9.12	N/A	-	2 Std	2.38"	3.66	N/A	-
6'-0"	YES	14"	3'-0"	4 Std	4.50"	10.80	N/A	-	2 Std	2.38"	3.66	N/A	-
8'-0"	YES	18"	3'-6"	5 Std	5.56"	14.60	N/A	-	2 Std	2.38"	3.66	N/A	-
10'-0"	YES	20"	4'-0"	6 Std	6.63"	19.00	N/A	-	2½ Std	2.88"	5.80	N/A	-

NOTES:

1. The table to the right shows minimum sized posts and braces complying with the specifications. Larger or heavier post and brace sizes may be used upon approval.
2. Sections shown in the tables must also comply with the strength requirements and other provisions of the Specifications.
3. Other sections which comply with the strength requirements and other provisions of the Specifications may be used upon approval.
4. Options exercised shall be uniform on any one project.
5. Offset to be 2'-0" at monument locations, measured at right angles to R/W lines. Taper to achieve offset to be at least 20'-0" long.
6. See Standard Plan A85B for Brace, Stretcher Bar, and Truss Tightener Details.

STATE OF CALIFORNIA
DEPARTMENT OF TRANSPORTATION

CHAIN LINK FENCE

NO SCALE

RSP A85 DATED JULY 21, 2017 SUPERSEDES RSP A85 DATED JANUARY 20, 2017 AND RSP A85 DATED JULY 15, 2016 AND STANDARD PLAN A85 DATED OCTOBER 30, 2015 - PAGE 117 OF THE STANDARD PLANS BOOK DATED 2015.

REVISED STANDARD PLAN RSP A85

2015 REVISED STANDARD PLAN RSP A85

2-28-17

Dist	COUNTY	ROUTE	POST MILES TOTAL PROJECT	SHEET No.	TOTAL SHEETS

Randell D. Hiatt
REGISTERED CIVIL ENGINEER

January 20, 2017
PLANS APPROVAL DATE

REGISTERED PROFESSIONAL ENGINEER
Randell D. Hiatt
No. C50200
Exp. 6-30-17
CIVIL
STATE OF CALIFORNIA

THE STATE OF CALIFORNIA OR ITS OFFICERS OR AGENTS SHALL NOT BE RESPONSIBLE FOR THE ACCURACY OR COMPLETENESS OF SCANNED COPIES OF THIS PLAN SHEET.

TO ACCOMPANY PLANS DATED _____

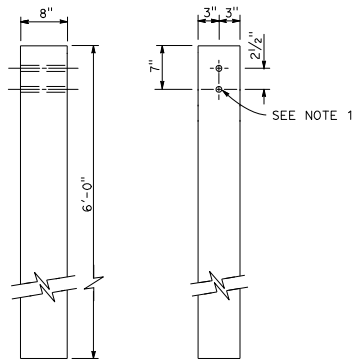

SIDE FRONT

6" x 8" WOOD POST
See Note 3

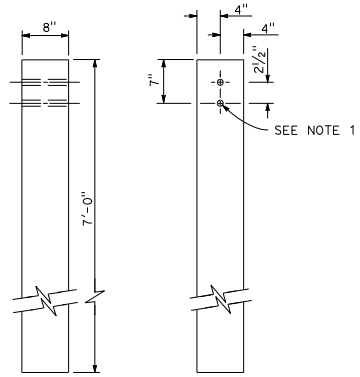

SIDE FRONT

8" x 8" WOOD POST
See Note 4

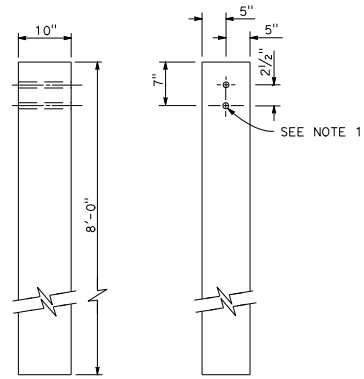

SIDE FRONT

10" x 10" WOOD POST
See Note 5

NOTES:

1. All holes in wood posts and blocks shall be ¾" Dia ± 1/16".
2. Dimensions shown for wood post are nominal.
3. This post and block combination used for standard line post sections of MGS.
4. This post and 8" x 12" block combination used for line post sections of MGS on narrow roadways.
5. This post and 8" x 12" block combination is typically used where strengthened line post sections of MGS are warranted to shield fixed objects.
6. See Revised Standard Plan RSP A77L3 for use of 6" x 8" and 8" x 8" wood blocks.
7. To be used with 8" x 8" x 7'-0" wood post if installed with 6" height dike.
8. To be used with 6" x 8" x 6'-0" wood post if installed with 6" height dike.

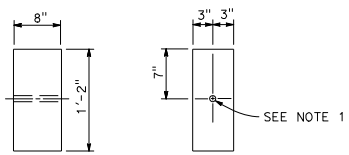

SIDE FRONT

6" x 8" WOOD BLOCK
See Note 6 and Note 3

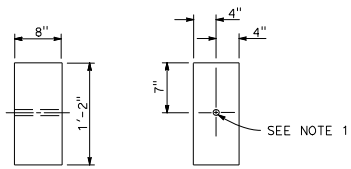

SIDE FRONT

8" x 8" WOOD BLOCK
See Note 6 and Note 4

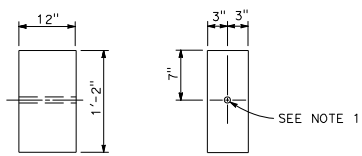

SIDE FRONT

6" x 12" WOOD BLOCK
See Note 8

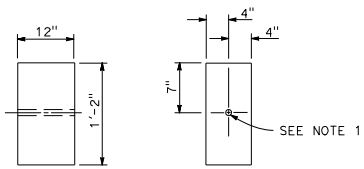

SIDE FRONT

8" x 12" WOOD BLOCK
See Note 7

STATE OF CALIFORNIA
DEPARTMENT OF TRANSPORTATION

MIDWEST GUARDRAIL SYSTEM WOOD POST AND WOOD BLOCK DETAILS

NO SCALE

RSP A77N1 DATED JANUARY 20, 2017 SUPERSEDES STANDARD PLAN A77N1
DATED OCTOBER 30, 2015 - PAGE 53 OF THE STANDARD PLANS BOOK DATED 2015.

REVISED STANDARD PLAN RSP A77N1

2015 REVISED STANDARD PLAN RSP A77N1

7-21-16

Dist	COUNTY	ROUTE	POST MILES TOTAL PROJECT	SHEET No.	TOTAL SHEETS

Randell D. Hiatt
REGISTERED CIVIL ENGINEER

January 20, 2017
PLANS APPROVAL DATE

REGISTERED PROFESSIONAL ENGINEER
Randell D. Hiatt
No. C50200
Exp. 6-30-17
CIVIL
STATE OF CALIFORNIA

THE STATE OF CALIFORNIA OR ITS OFFICERS OR AGENTS SHALL NOT BE RESPONSIBLE FOR THE ACCURACY OR COMPLETENESS OF SCANNED COPIES OF THIS PLAN SHEET.

TO ACCOMPANY PLANS DATED _____

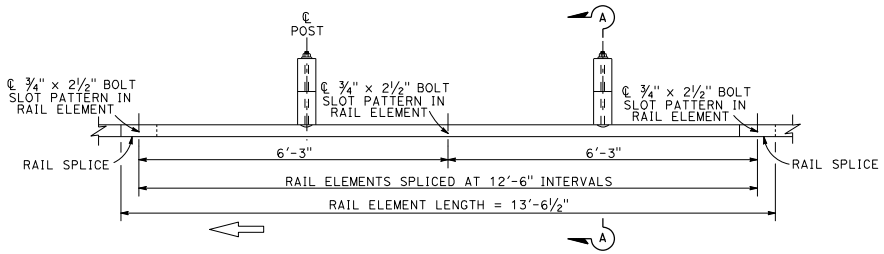

PLAN

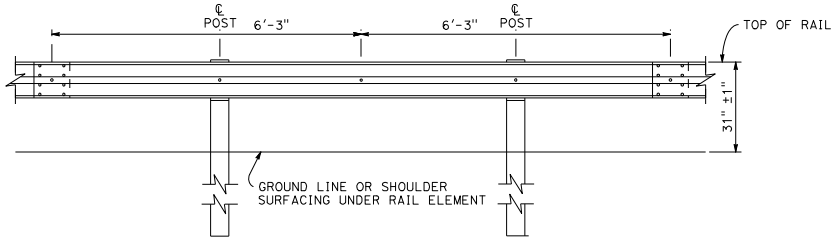

ELEVATION

MIDWEST GUARDRAIL SYSTEM WITH WOOD POST AND BLOCKS

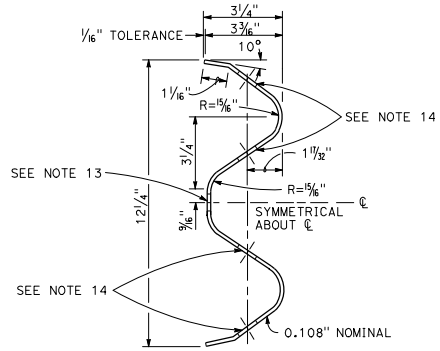

SECTION THRU
RAIL ELEMENT

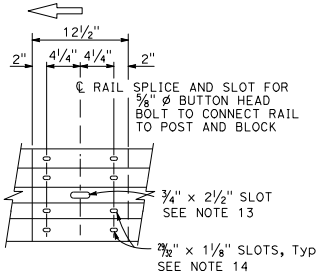

ELEVATION

RAIL ELEMENT SPLICE DETAIL

a) Connect the overlapped end of the rail elements with ⅝" Ø x 1⅜" button head oval shoulder splice bolts inserted into the 29⁄32" x 1⅛" slots and bolted together with ⅝" Ø recessed hex nuts. Recess of hex nut points toward rail element. A total of 8 bolts and nuts are to be used at each rail splice connection.

b) The ends of the rail elements are to be overlapped in the direction of traffic (see details).

c) Where end cap is to be attached to the end of a rail element, a total of 4 of the above described splice bolts and nuts are to be used.

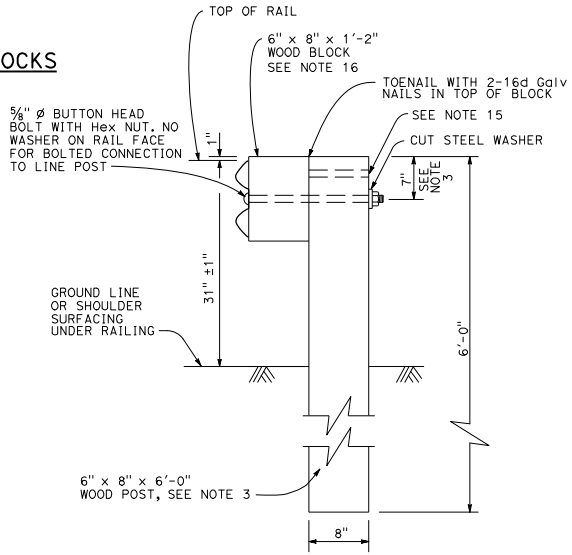

SECTION A-A

TYPICAL WOOD LINE POST INSTALLATION

See Note 4

NOTES:

1. For details of steel post installations, see Revised Standard Plan RSP A77L2.
2. For details of standard hardware used to construct MGS, see Standard Plan A77M1.
3. For details of wood posts and wood blocks used to construct MGS, see Revised Standard Plan RSP A77N1.
4. For additional installation details, see Standard Plan A77N3.
5. MGS post spacing to be 6'-3" center to center, except as otherwise noted.
6. For MGS typical layouts, see the A77P, A77Q and A77R Series of Standard Plans.
7. If railing is connected to terminal system end treatment, use 31" height terminal system end treatment.
8. For MGS end anchor details, see Standard Plans A77S1 and A77T2.
9. For details of MGS transition to bridge railing, see Standard Plan A77U4.
10. For additional details of MSG connection to bridge railing, see Standard Plans A77U1, A77U2 and A77V1.
11. For MGS connection details to abutments and walls, see Standard Plan A77U3.
12. For typical MGS delineation and dike positioning details, see Standard Plan A77N4.
13. Slotted hole for bolted connection of rail element to block and post.
14. Slotted holes for splice bolts to overlap ends of rail element.
15. Additional hole in uppermost portion of line post is for potential future adjustments of railing height. See Revised Standard Plan RSP A77N1.
16. 6" x 12" x 1'-2" block must be used with 6" dike.

STATE OF CALIFORNIA
DEPARTMENT OF TRANSPORTATION

MIDWEST GUARDRAIL SYSTEM STANDARD RAILING SECTION (WOOD POST WITH WOOD BLOCK)

NO SCALE

RSP A77L1 DATED JANUARY 20, 2017 SUPERSEDES STANDARD PLAN A77L1 DATED OCTOBER 30, 2015 - PAGE 49 OF THE STANDARD PLANS BOOK DATED 2015.

REVISED STANDARD PLAN RSP A77L1

2015 REVISED STANDARD PLAN RSP A77L1

1-10-17

Dist	COUNTY	ROUTE	POST MILES TOTAL PROJECT	SHEET No.	TOTAL SHEETS

REGISTERED CIVIL ENGINEER

July 21, 2017
PLANS APPROVAL DATE

REGISTERED PROFESSIONAL ENGINEER Jeff C. Kepley No. 53361 Exp. 6-30-19 CIVIL STATE OF CALIFORNIA

THE STATE OF CALIFORNIA OR ITS OFFICERS OR AGENTS SHALL NOT BE RESPONSIBLE FOR THE ACCURACY OR COMPLETENESS OF SCANNED COPIES OF THIS PLAN SHEET.

TO ACCOMPANY PLANS DATED _____

WATER POLLUTION CONTROL

- -xx——xx— THVF —xx——xx——xx— Temp HIGH-VISIBILITY FENCE
- -xx——xx— TSF —xx——xx——xx— Temp SILT FENCE
- -xx——xx— TRSF —xx——xx——xx— Temp Reinf SILT FENCE
- TFR Temp FIBER ROLL
- TGBB Temp GRAVEL BAG BERM
- TSBB Temp STRAW BALE BARRIER
- Temp SLOPE DRAIN FLEX PIPE
- Temp EARTH BERM
- Temp DITCH/SWALE
- WASH Temp CONCRETE WASHOUT
- Temp DRAINAGE INLET PROTECTION
- Temp DRAINAGE OUTLET PROTECTION
- Temp CHECK DAM
- Temp CONSTRUCTION ENTRANCE
- SP Temp STOCKPILE

BOUNDARY LINE

- STATE OR COUNTRY
- COUNTY OR RESERVATION BOUNDARY
- CITY OR MILITARY BOUNDARY
- FOREST
- SUBDIVISION, SECTION, GRANT
- RANCHO

ENVIRONMENTALLY SENSITIVE AREA (ESA)

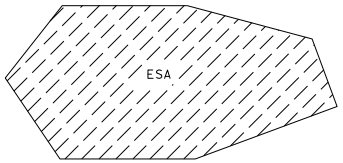

DRAINAGE

- DIRECTION FLOW OF WATER
- DRAINAGE SYSTEM SYMBOL
- DRAINAGE UNIT SYMBOL
- DRAINAGE INLET
- DITCH FLOW LINE

DRAFTING

- TILDE - DESIGNATES AN AREA
- NORTH ARROW
- ADDENDUM SHEET SYMBOL *(ADDENDUM NUMBER IS INCLUDED INSIDE THE SYMBOL)*
- MATCH LINE
- BREAK LINE

STATE OF CALIFORNIA
DEPARTMENT OF TRANSPORTATION

LEGEND
LINES AND SYMBOLS
(SHEET 2 OF 5)

NO SCALE

RSP A10B DATED JULY 21, 2017 SUPERSEDES RSP A10B DATED JANUARY 20, 2017 AND STANDARD PLAN A10B DATED OCTOBER 30, 2015 - PAGE 5 OF THE STANDARD PLANS BOOK DATED 2015.

REVISED STANDARD PLAN RSP A10B

2015 REVISED STANDARD PLAN RSP A10B

6-13-17

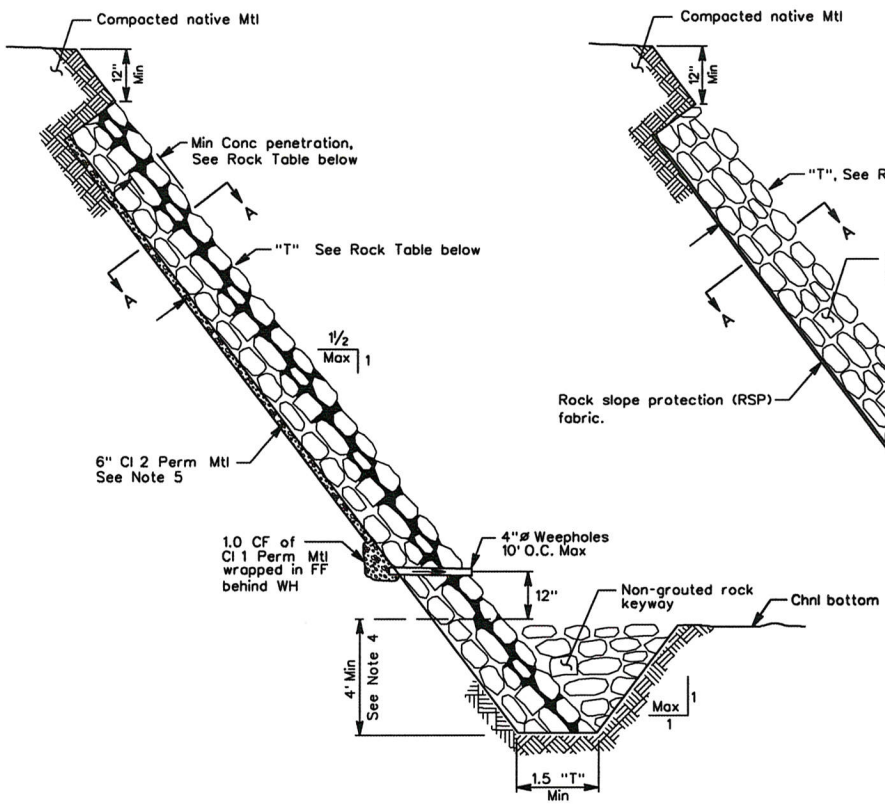

CONCRETED-ROCK SLOPE PROTECTION (CRSP)

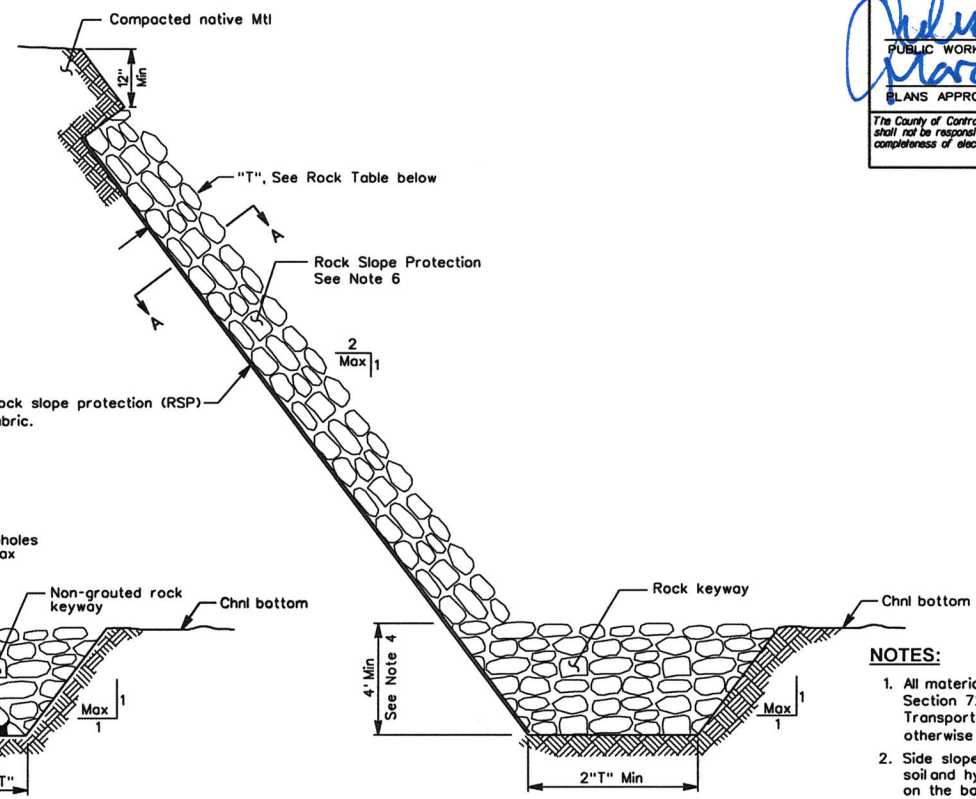

ROCK SLOPE PROTECTION (RSP)

PUBLIC WORKS DIRECTOR

March 11, 2015

PLANS APPROVAL DATE

The County of Contra Costa or its officers or agents shall not be responsible for the accuracy or completeness of electronic copies of this plan sheet.

REGISTERED PROFESSIONAL ENGINEER JULIA R BUEREN No. 37937 CIVIL STATE OF CALIFORNIA

NOTES:

1. All materials shown on this plan shall conform to Section 72 of the California Department of Transportation's Standard Specifications unless otherwise specified.
2. Side slopes and toe depth are dependent on soil and hydraulic conditions and may be varied on the basis of supporting engineering data.
3. Thickness "T" shall conform to the "Rock Table" as shown, unless otherwise directed by the Public Works Department.
4. Depth of keyway may vary. The 48" minimum may decrease in the event bed rock is less than 48" below channel bed and directed by the Public Works Department.
5. Use class 2 permeable material conforming to Section 68-2.02F of California Department of Transportation's Standard Specifications, unless otherwise directed by the Public Works Department.
6. Soil cover placed over the rock slope protection or concreted-rock slope protection as required by the Public Works Department or as shown on the plans.

ROCK TABLE

Rock Grading	Min. Conc penetration (in)	"T" (in)
½Ton	18	42
¼Ton	14	32
Light	10	24
Facing	8	18

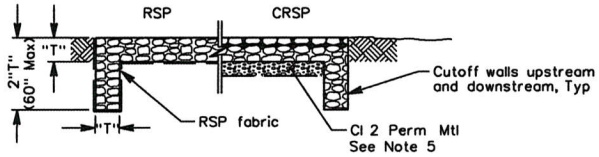

SECTION A-A - CUTOFF WALL DETAIL

NO.	DATE	REVISION DESCRIPTION	BY

COUNTY OF CONTRA COSTA
PUBLIC WORKS DEPARTMENT
MARTINEZ, CALIFORNIA

STANDARD PLAN

ROCK SLOPE PROTECTION

SCALE: NO SCALE | DATE: 3/14
DRAWN BY: H. HUSSEY | PLAN NO. CD40
CHECKED BY: M. HOLLINGSWORTH

STD. PLAN CD40

NOTES:

1. All inlets shall have a County approved "anti-pollution" plastic marker attached to the inlet as directed by the Inspector or Resident Engineer. The marker shall be applied following manufacturer's recommendations. PCC surfaces shall be mechanically cleaned just prior to attaching the marker. The marker and adhesive may be furnished by the Public Works Department, check your permit conditions or contract Special Provisions.
2. Steps shall be steel reinforced polypropylene plastic, M.A. Industries, Inc. No. PS2-PF or equivalent. Steps to be cast in place or press fitted into holes per manufacturer. Install steps with lowest rung 12" maximum above the floor and highest rung not more than 6" below top of inlet. The spacing between steps shall not exceed 16" and shall be uniform throughout the length of the wall. Place steps in the wall without an opening. Steps shall not be installed on inlet back wall. No steps required where distance from floor of inlet to top of grate is 4' or less. See "Step Detail"
3. Weephole elevation varies depending on the depth of the adjoining pavement section. It shall be at, or slightly below, the pavement section subgrade elevation with a minimum depth of 18" below the curb inlet grate elevation. **The side weephole detail shall be used at all "sump" locations.** Edge drain (Standard Plan CD08), or side weephole drains detail at other locations may be required as shown on the construction plans or by the Public Works Department. Where the side weephole detail or edge drains are not required, these weepholes shall conform to the front face weephole details shown on this plan.
4. 3" edge drain per Standard Plan CD08, when shown on the plans or specified by the Public Works Department.
5. Concrete shall conform to Section 90, "Concrete", of California Department of Transportation's Standard Specifications and the following.
   - A. Construction joints shown on standard plans are permitted when top portion of inlet is to be constructed monolithically with curb and sidewalk. Key dimensions-¾" x 3".
   - B. Concrete construction joint shall be located 12" to 18" below top of curb elevation.
   - C. Concrete above construction joint shall contain a minimum of 505 lbs of cementious material per cubic yard, 1" maximum aggregate grading.
   - D. Concrete below construction joint shall contain a minimum of 590 lbs of cementious material per cubic yard, 1" maximum aggregate grading.
   - E. When inlet is constructed as a single unit concrete shall comply with item D, described above.
6. Type "I" manhole (Std Pln CD30) bases are for use with pipes to 24" in diameter and where there is sufficient cover to use minimum length manhole barrel, eccentric cone, and cover frame. Use Type "II" manhole bases (Std Pln CD31) with pipes to 42" in diameter. Type "III" manhole bases (Std Pln CD32) for 60" in diameter. Use Type "V" manhole bases (Std Pln CD34) for pipes up to 96" in diameter. For pipe larger than 96" in diameter, a special manhole base design is required.
7. Unless otherwise noted on Standard Plans all concrete shall contain not less than 590 lbs. of cementious material per cubic yard, 1" maximum grading in conformance with Section 90, "Concrete" of California Department of Transportation's Standard Specifications. Invert paving concrete shall contain not less than 505 lbs per cubic yard of cementious material, 1" maximum grading, in conformance with said Standard Specifications.
8. Inlet and outlet pipes shall not intercept a manhole base through a corner. If skew angle is too great to permit the opening to be made in a single wall face, use a Type "III" manhole base. (See Std Pln CD32).

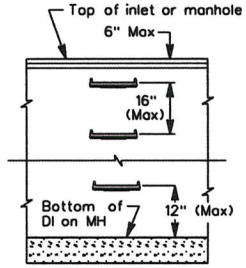

STEP DETAIL
See Note 2

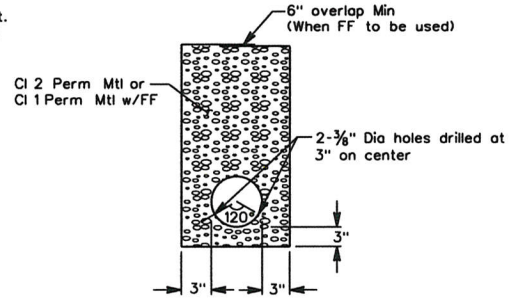

EDGE DRAIN TRENCH DETAIL

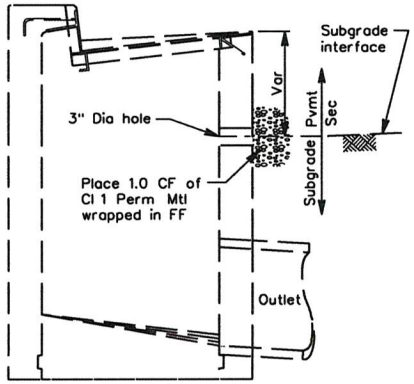

STANDARD FRONTSIDE WEEPHOLE DETAIL
See Note 3

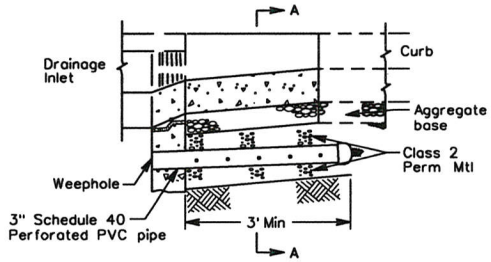

SIDE WEEPHOLE DRAIN DETAIL
See Note 3

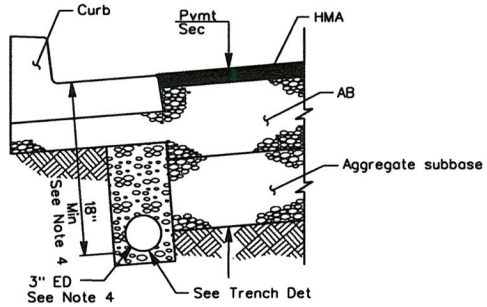

SECTION A-A

PUBLIC WORKS DIRECTOR
March 11, 2014
PLANS APPROVAL DATE

The County of Contra Costa or its officers or agents shall not be responsible for the accuracy or completeness of electronic copies of this plan sheet.

REGISTERED PROFESSIONAL ENGINEER
JULIA R BUEREN
No. 37937
CIVIL
STATE OF CALIFORNIA

NO.	DATE	REVISION DESCRIPTION	BY

COUNTY OF CONTRA COSTA
PUBLIC WORKS DEPARTMENT
MARTINEZ, CALIFORNIA

STANDARD PLAN

STD INLET/MANHOLE PLAN GENERAL NOTES & DETAILS

SCALE: NO SCALE | DATE: 3/14
DRAWN BY: H. HUSSEY | PLAN NO. CD35
CHECKED BY: M. HOLLINGSWORTH

STD. PLAN CD35

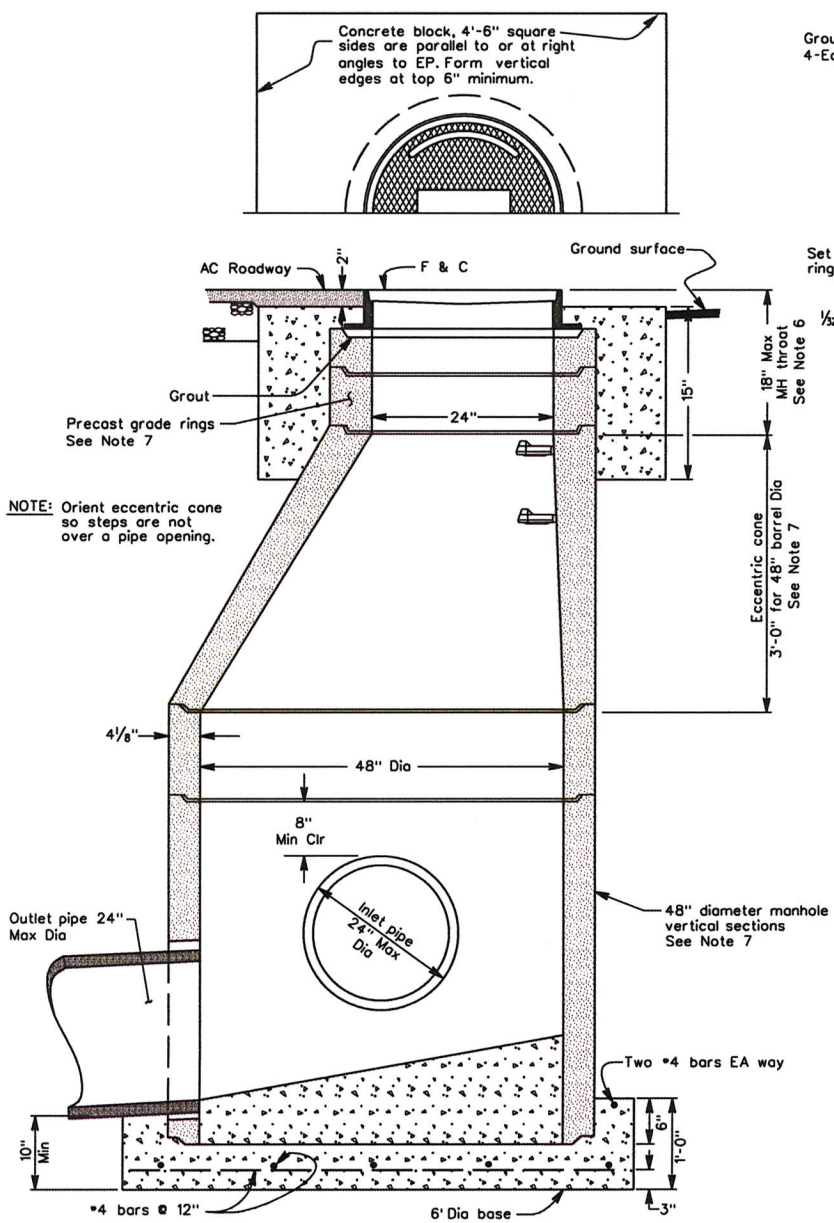

NOTE: Orient eccentric cone so steps are not over a pipe opening.

PRECAST MANHOLE WITH TYPE I BASE

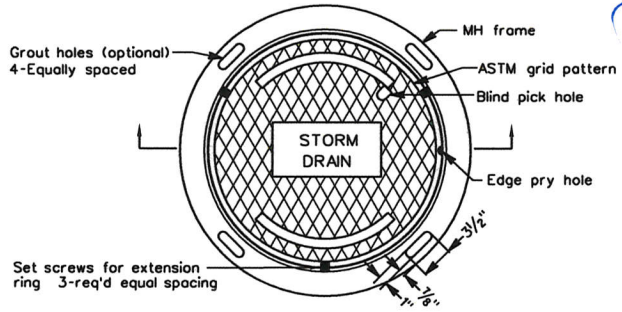

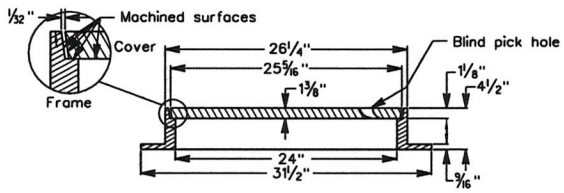

TYPICAL FRAME AND COVER DETAIL

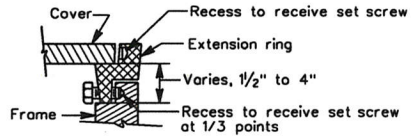

TYPICAL CAST IRON EXTENSION RING
See Note 7

NOTES:

1. For General Manhole Notes and Details, see Standard Plan CD35.
2. All concrete joints shall be cleaned wetted, and mortared prior to setting next section. Joints shall then be patched, troweled, and brushed smooth.
3. Frame and extension rings must be secured by concrete block, unless approved otherwise by the Public Works Department.
4. Manhole cover frame shall be adjusted to conform to grade and cross slope of pavement.
5. Manhole frame and cover shall be Phoenix Iron (Oakland) Model P-1090 or South Bay Foundry No. 1900 CPH or approved equivalent.
6. Use of precast grade rings are limited by 18" maximum manhole throat length. Cast iron extension rings are allowed for conforms to pavement overlays only.
7. The precast components shall conform to the Central Precast (U.S. Concrete Precast Group, Northern California) Drawing Nos. 20-48C, 20-48V and 20-48 EC, or equivalent.

PUBLIC WORKS DIRECTOR
March 11, 2014
PLANS APPROVAL DATE

The County of Contra Costa or its officers or agents shall not be responsible for the accuracy or completeness of electronic copies of this plan sheet.

REGISTERED PROFESSIONAL ENGINEER
JULIA R BUEREN
No. 37937
CIVIL
STATE OF CALIFORNIA

NO.	DATE	REVISION DESCRIPTION	BY

COUNTY OF CONTRA COSTA
PUBLIC WORKS DEPARTMENT
MARTINEZ, CALIFORNIA

STANDARD PLAN

PRECAST MANHOLE, TYPE I BASE, FRAME & COVER

SCALE: NO SCALE
DATE: 3/14
DRAWN BY: H. HUSSEY
CHECKED BY: M. HOLLINGSWORTH
PLAN NO. CD30

STD. PLAN CD30

PUBLIC WORKS DIRECTOR

March 11, 2014

PLANS APPROVAL DATE

The County of Contra Costa or its officers or agents shall not be responsible for the accuracy or completeness of electronic copies of this plan sheet.

REGISTERED PROFESSIONAL ENGINEER — JULIA R BUEREN — No. 37937 — CIVIL — STATE OF CALIFORNIA

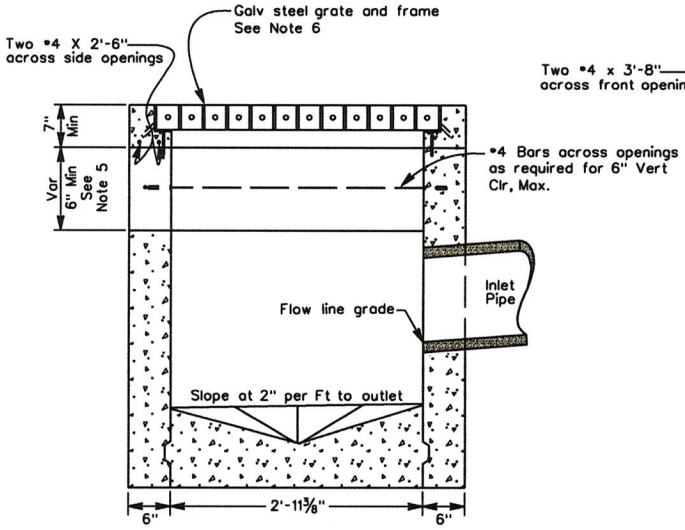

SECTION A-A

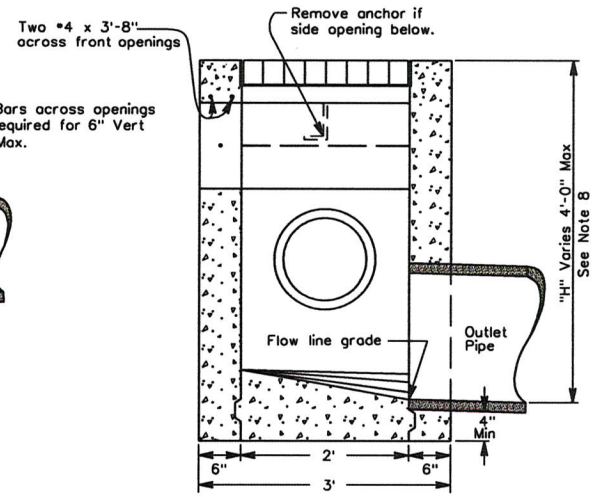

SECTION B-B

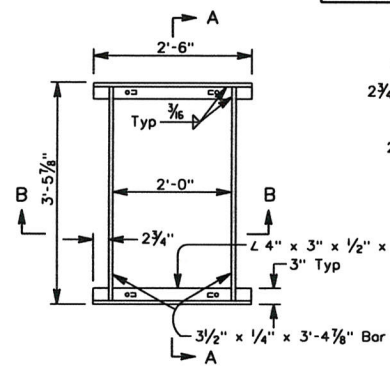

TYPE C INLET FRAME

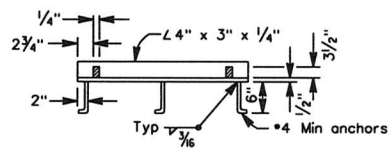

SECTION B-B
(Thru frame)

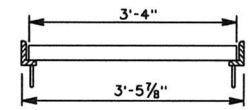

SECTION A-A
(Thru frame and grate)

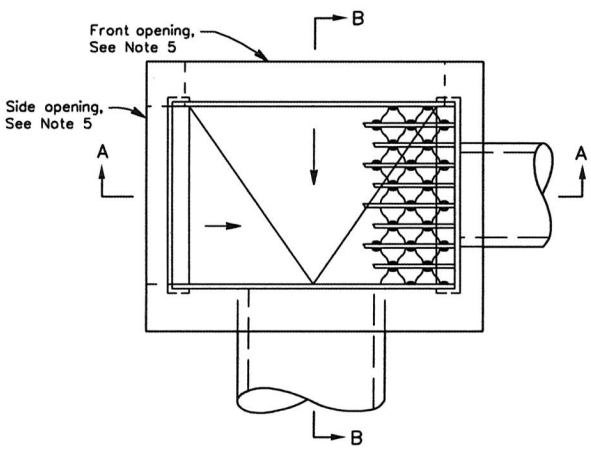

PLAN

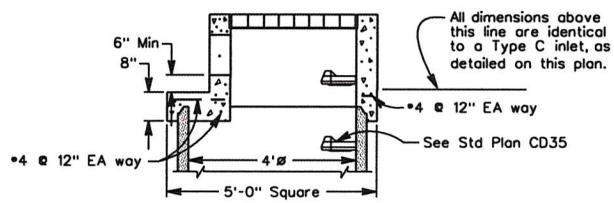

TYPE "C" OPENING ON PRECAST MANHOLE BARREL
REFER TO STANDARD PLAN CD30

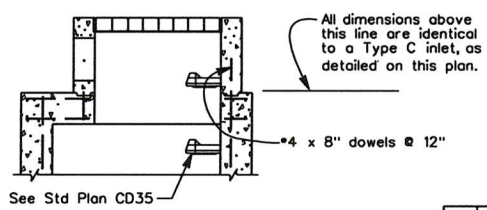

TYPE "C" OPENING ON MANHOLE BASE
REFER TO STANDARD PLAN CD31

NOTES:

1. See Standard Plan CD35 for Inlet General Drainage Notes.
2. Type J inlets shall not be used in pedestrian areas.
3. Construction joints are optional where shown. Other locations are subject to the approval of the Public Works Department. Key Dimensions are ¾" x 2½".
4. Min clearance shall be 2" for all reinforcing steel.
5. Location, flowline elevation and size of side openings to be as shown on plans, or as directed by the Public Works Department.
6. All Inlets shall be constructed with Caltrans Type 24-10S grates, see Caltrans Standard Plan D77B, and Type J inlet frame shown on this plan.
7. No precast Type J inlets are allowed without prior approval of the Public Works Department.
8. Maximum depth for Type J inlet shall be 4'. For depths greater than 4' use a manhole base with a Type J top. The Type J inside wall with steps shall be flush with manhole base inside wall below.

NO.	DATE	REVISION DESCRIPTION	BY

COUNTY OF CONTRA COSTA
PUBLIC WORKS DEPARTMENT
MARTINEZ, CALIFORNIA

STANDARD PLAN

TYPE "J" INLET

SCALE: NO SCALE | DATE: 3/14
DRAWN BY: L. COSTA | PLAN NO. CD29
CHECKED BY: M. HOLLINGSWORTH

STD. PLAN CD29

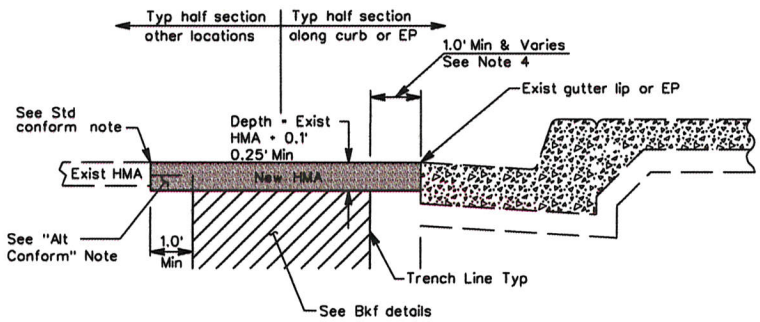

TRENCH PAVING DETAILS

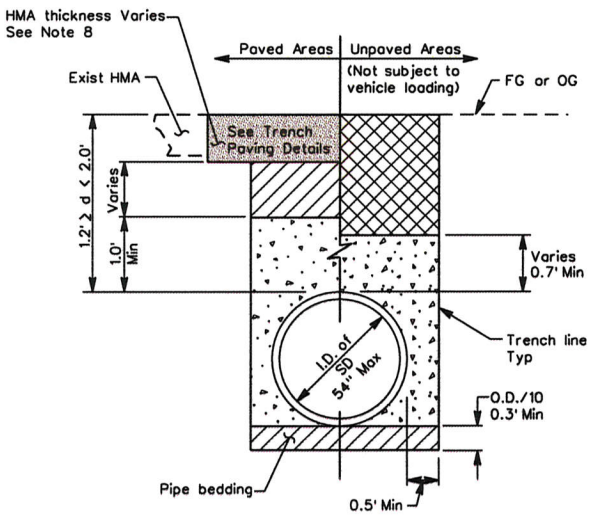

SHALLOW TRENCH BACKFILL DETAILS

TYPICAL HALF SECTIONS
1.2' ≥ d < 2.0'
See Note 3

LEGEND

- HMA Paving
- Cl 2 AB
- Conc Bkf, See Note 6
- Cl 2 AB, or suitable native Bkf Mtl with a Min sand equivalent of 20.
- Suitable native Mtl, no solid materials (rock, Conc) larger than 4 inches in greatest dimension or organic matter.

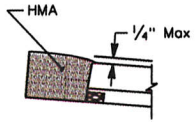

DETAIL A
Gutter Lip Paving

CONFORM NOTES:

The pavement conform shall be as follows:

STANDARD CONFORM:

Cut through the full depth of existing HMA to a neat straight line at least 1.0 foot beyond the trench line. Re-cut any pavement edges damaged during construction to neat lines prior to paving. Paint binder (tack coat) shall be applied to all vertical surfaces in accordance with the latest edition of Caltrans Standard Specifications.

ALTERNATE CONFORM:

Grind existing HMA to a minimum depth of 0.20 feet on a neat straight line at least 1.0 foot beyond the trench line. Any pavement edges, including ground edges, damaged during construction shall be re-cut or re-ground to neat lines prior to paving. Paint binder (tack coat) shall be applied to all vertical surfaces in accordance with the latest edition of Caltrans Standard Specifications.

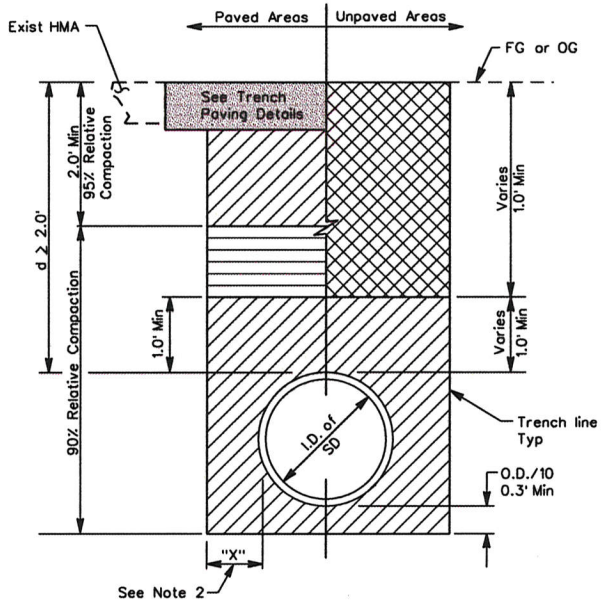

STANDARD TRENCH BACKFILL DETAILS

TYPICAL HALF SECTIONS
d ≥ 2.0'

NOTES:

1. Unsuitable native material shall be excavated below the limit of excavation and replaced with suitable backfill material when directed by the Public Works Department.
2. "X" shall be as a minimum, the dimensions shown below for the storm drain "I.D.".

I.D.	"x"
up to 12"	0.5'
12" to 54"	1.0'
over 54"	2.0'

3. If cover is less than 1.2' or the storm drain I.D. exceeds 54 inches in shallow installations, a special design is required with approval by the Public Works Department.
4. Where the trench parallels curb and the nearest trench line is less than 3 feet from the gutter lip, all existing HMA shall be replaced to the gutter lip. For gutter lip paving detail see Detail A.
5. Hot mix asphalt shall be ½-inch Type A HMA in conformance with Section 39, "Hot Mix Asphalt," of the California Department of Transportation's Standard Specifications, unless otherwise specified in the County contract, encroachment permit's Special Road Encroachment Permit Conditions or as directed by the Public Works Department.
6. Concrete shall contain not less than 505 lbs of cementious material per cubic yard in conformance with Section 90, "Concrete," of the California Department of Transportation's Standard Specifications.
7. This standard plan shall govern over encroachment permit's Standard Road Encroachment Permit Conditions, and General Permit Conditions-Attachment 1. County Contract Special Provisions and Plans, or Encroachment permit's Special Road Encroachment Permit Conditions shall govern over this standard plan.
8. HMA thickness shall be existing HMA plus 0.1'. If PCC backfill encroaches into this specified thickness, the HMA thickness may be reduced, except the minimum HMA thickness shall not be less than 0.20'.

PUBLIC WORKS DIRECTOR
March 11, 2014
PLANS APPROVAL DATE

The County of Contra Costa or its officers or agents shall not be responsible for the accuracy or completeness of electronic copies of this plan sheet.

REGISTERED PROFESSIONAL ENGINEER
JULIA R BUEREN
No. 37937
CIVIL
STATE OF CALIFORNIA

NO.	DATE	REVISION DESCRIPTION	BY

COUNTY OF CONTRA COSTA
PUBLIC WORKS DEPARTMENT
MARTINEZ, CALIFORNIA

STANDARD PLAN

STORM DRAIN TRENCH DETAILS

SCALE: NO SCALE
DATE: 3/14
DRAWN BY: H. HUSSEY
PLAN NO. CD01
CHECKED BY: M.HOLLINGSWORTH

STD. PLAN CD01

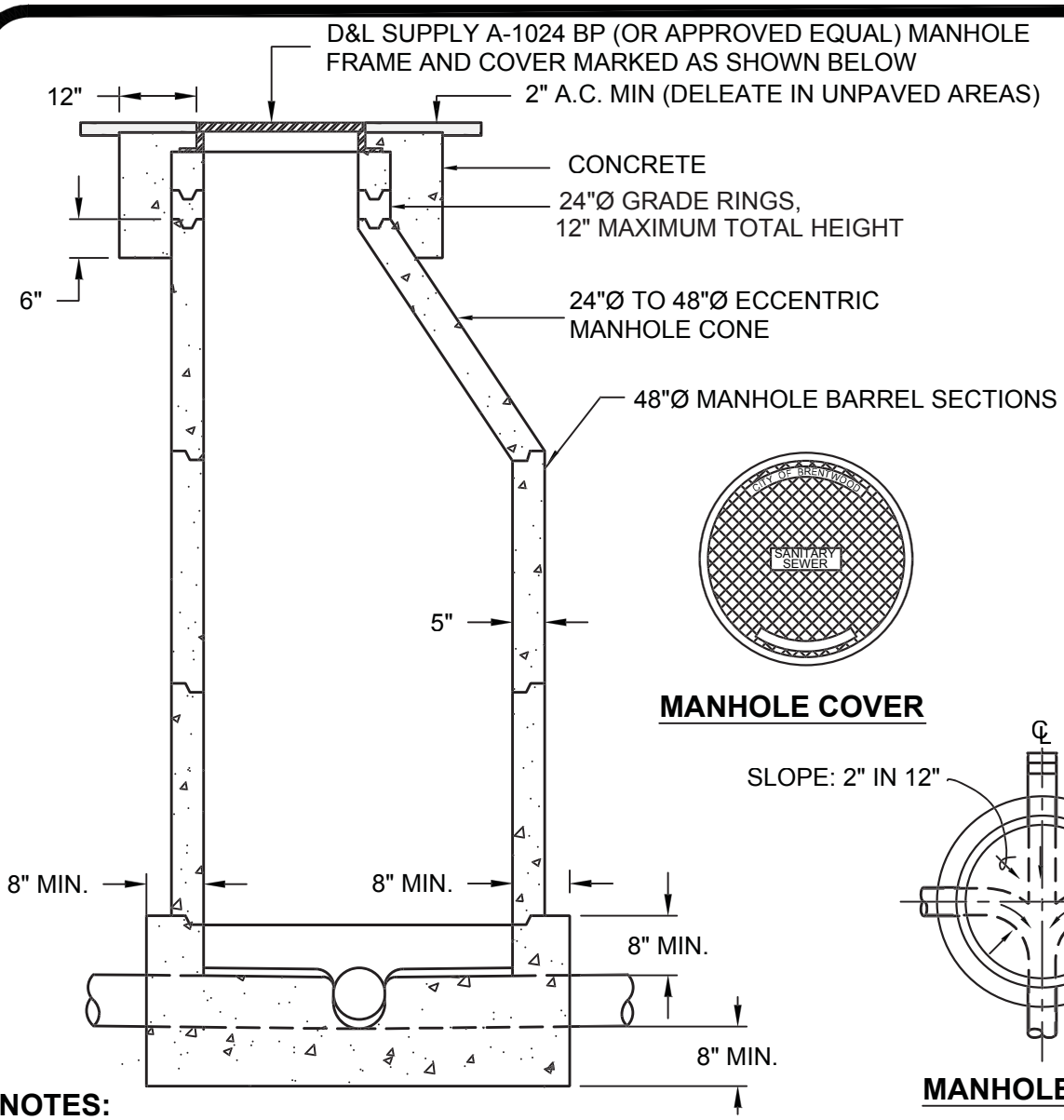

MANHOLE COVER

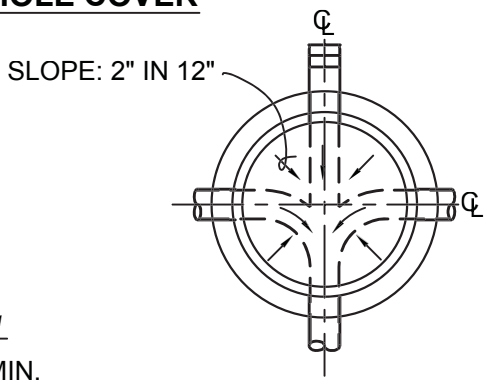

MANHOLE BASE

NOTES:

1. FOR PIPES UP TO 21" IN DIAMETER; SEE SS-3 FOR SEWER LINE 20' OR DEEPER.
2. FORM BASE TO PROVIDE A SMOOTH FLOW CHANNEL.
3. ALL CONCRETE TO BE CLASS A, 3000 P.S.I. MIN.
4. 1:3 GROUT MIX OR 3" RAM-NEK JOINT COMPOUND (OR APPROVED EQUAL) IN ALL JOINTS INSIDE AND OUT.
5. ALL MANHOLES SHALL BE VACUUM TESTED PER CITY SPECIFICATIONS.
6. MANHOLE BASE SHALL EXTEND 18" OUTSIDE BARREL WHEN CONSTRUCTED IN SAND.
7. BACKFILL AROUND MANHOLE SHALL BE CLASS II A.B. COMPACTED TO 95%.
8. NEW MANHOLE WITH SEWER MAIN ≥ 10" DIA. SHALL BE EPOXY COATED WITH MADEWELL MAINSTAY DS-5 OR APPROVED EQUAL.
9. INTERCEPTOR MANHOLES ON EXISTING SEWER MAINS OR TRUNK LINES SHALL BE EPOXY COATED IRRESPECTIVE OF SEWER MAIN SIZE.

(Not To Scale)

PUBLIC WORKS DEPARTMENT

THE CITY OF BRENTWOOD

SANITARY SEWER MANHOLE

BALWINDER S. GREWAL CITY ENGINEER

DATE:	OCT. 31, 2000	SHEET No.
REVISED:	DEC. 31, 2013	SS-2

Print Reset

Grading Permit Application

Public Works Department
Engineering Division

Effective: July 1, 2007
Revised: August 1, 2016

Assigned Permit No.

Owner/
Applicant: _____

Address: _____

_____

Phone: _____

Contractor: _____

Address: _____

_____

Phone: _____

Contractor License No.: _____

Business License No.: _____

After Hour Contact: _____

Phone: _____

Engineer: _____

RCE No.: _____

Address: _____

_____

Phone: _____

Soil Engineer/Geologist: _____

RCE/REG No: _____

Address: _____

_____

Phone: _____

Engineering Estimate (CY): _____

Engineering Est. Cost: _____

Description of work:

Schedule of Work:

I hereby certify that all information provided in this application is true and complete and I agree to comply with the all conditions attached to the permit and on the reverse side hereof.

_____

Applicant's Signature Date

FEE CALCULATION

Processing:	$ _____
Inspection Fee:	$ _____
Bond:	$ _____
Other:	$ _____
Total Fee:	**$** 0.00

PERMIT APPROVED:

_____

City Engineer Date

*****This form is for application submittal purposes only *****

GRADING PERMIT NOTES

PER CHAPTER 15.52 THE CITY OF BRENTWOOD MUNICIPAL CODE, ENGINEERING PROCEDURES MANUAL AND STANDARD PLANS & SPECIFICATION

1. This permit is void if work is not begun within 60 days of issuance and not completed within one year.

2. Permittee shall notify an Engineering inspector to set up a pre-construction meeting at least 36 hours prior to the start of any work. The name and phone number of the assigned inspector will be provided on the permit. This condition also applies to restart of the job when closed down by rain or other reasons for more than 10 days.

3. Call Underground Service Alert (USA) at least 48 hours prior to the start any construction.

4. All grading and noise therefore including, but not limited to, warming of equipment motors in residential zones or within one thousand (1000) feet of any residential occupancy, hotel, motel or hospital shall be limited between the regular hours of 7:00 A.M. to 3:30 P.M., Monday through Friday. The owner or developer must submit a written request for approval by the City Engineer at least two (2) working days in advance to work during any other hours, weekends, or holidays.

5. The following special hours of work will be enforced from Monday through Friday:

   A. Work affecting traffic on Balfour Road, Brentwood Boulevard, Fairview Avenue, Lone Tree Way, Sand Creek Road, Central Boulevard or Walnut Boulevard will be limited to 9:00 am to 3:00 pm.

   B. Work adjacent to or within fifteen hundred feet (1500') of any school while school is in session will be limited to 9:00 am to 3:00 pm.

   C. Work within three hundred feet (300') of occupied residential units and not affecting Balfour Road, Brentwood Boulevard, Fairview Avenue, Lone Tree Way or Walnut Boulevard, south of Balfour Road will be limited to 8:00 am to 4:30 pm.

   D. Work in excess of three hundred feet (300') from occupied residential units and not affecting Balfour Road, Brentwood Boulevard, Fairview Avenue, Lone Tree Way or Walnut Boulevard, south of Balfour Road, will be limited to 7:00 am to 5:00 pm.

   E. All Saturday work shall be restricted to 9:00 am to 4:00 pm.

6. Whenever any portion of the work requires entry onto adjacent property for any reason, the permit applicant shall obtain a right–of-entry from the adjacent property owner or his authorized representative in a form acceptable to the City and shall file a copy of the fully executed right-of-entry with the City prior to issuance of the grading permit and/or approval of the grading plans.

7. The Permittee/Applicant and grading contractor shall be responsible for the protection of adjacent properties during grading operations. Prior to commencing any grading of the site, the exterior boundaries shall be marked as required by the City Engineer. Boundary markers shall be maintained throughout the grading operation. Temporary barriers and/or protective fencing shall be used when necessary to protect adjacent properties.

8. The Permittee shall be responsible for all liability for personal injury or property damage which may result from work permitted and done by the permittee or the failure of permittee to perform its obligations under the permit. If any claim of liability is made against the City, its officers or employees, the permittee shall defend, indemnify and hold them, and each of them, harmless from such claim insofar as permitted by law Contractor shall submit a Certificate of Liability Insurance to the City prior to any construction activities. Insurance shall name City of Brentwood as Additional Insured, and the Additional Insured Endorsement must be attached to deem insurance requirements complete.

9. All exposed or finished banks or slopes of any fill or excavation shall be protected from erosion by approved planting, irrigation, hydroseeding, cribbing, walls or terracing or a combination thereof. All graded surfaces exceeding five thousand (5,000) square feet in area shall be planted and irrigated, paved or built upon and shall be provided with berms and approved drainage facilities adequate to prevent erosion and to conduct the accumulation of runoff of surface waters to an approved place of discharge.

10. For commencement of the activity during the wet season, the applicant shall demonstrate to the satisfaction of the City Engineer, that land disturbances is relatively minor and that erosions and sedimentation can be controlled.

11. Erosion and sediment control measures shall be implemented as specified by the approved interim and final sediment and erosion control plans. Erosion and sediment control measures shall be consistent with the Manual of Sediment and Erosion Control Practices and Best Management Practices.

12. Except in the event of an emergency, the city shall provide verbal and written notice of the violation to the applicable permit holder prior to the issuance of a stop work notice. Fines shall be one hundred dollars for the first violation, two hundred fifty dollars for the second occurrence of the same violation (regardless of subcontractor) and one thousand dollars for each subsequent violation. (Ord. 671 § 1 (part), 2001; Ord. 463 § 2 (part), 1989)

13. The applicant shall provide security for the performance of the work described and delineated on the approved grading plan and interim and final erosion and sediment control plans in an amount not less than ten (10) percent of the total estimated cost of the work. The estimated cost of work shall be approved by the City Engineer.

14. The permittee will provide and maintain insurance in the following types with the following limits:

General Permittee

a) Commercial Liability Insurance, occurrence form, with a limit of not less than $1,000,000.00-$2,000,000.00 (dependent upon the size of the project) each occurrence. If such insurance contains a general aggregate limit, it shall apply separately to this permit or b e no less than two (2) times the occurrence limit. A Certificate of Liability shall be submitted with the City of Brentwood as Additional Insured. It must also include the Additional Insured Endorsement, without the Endorsement the Insurance will be considered invalid.

b) Automobile Liability Insurance, occurrence form, with a limit of not less than $1,000,000.00 each occurrence. Such insurance shall include coverage for owned, hired and non-owned automobiles.

c) Workers Compensation in at least the minimum statutory limits.

d) Employers' liability insurance, with minimum limits of $1 million per occurrence.

Homeowner Permittee

a) At the City's discretion, the City of Brentwood may allow copies of Home Owner Insurance certificates for review and file dependent upon the size and scope of work being proposed.

15. The type of security shall be either:

   A. Cash deposit with the City; or

   B. A certificate of deposit approved by the City Attorney from a financial institution subject to regulations by the State or Federal government who said financial institution pledges funds are on deposit and guaranteed for payment and payable immediately, partially or in full, to the City upon demand.

16. Any unused security posted with the City for faithful performance shall be released as follows:

   A. Eighty (80) percent of the unused security will be returned upon completion and acceptance of the work by the City Engineer (less any outstanding claims);

   B. Any remainder of the security will be released twelve (12) months after completion and acceptance of the work by the City Engineer provided all defective work is corrected to the satisfaction of the City Engineer.

17. Upon the final completion of the work, the following reports and drawings and supplements thereto shall be submitted to the City Engineer.

   A. A soils and geologic grading report prepared by the Soils Engineer and/or engineering geologist including location and elevations of field density test, summaries of field and laboratory tests and other substantiating data and comments on any changes made during grading and their effect on the recommendations made in the Soil Engineering Investigation Report. The report shall include a final description of the geology of the site, including any new information disclosed during the grading and the effect of same on recommendations incorporated in the approved grading plan. A certification shall be provided as to the adequacy of the site for the intended use as affected by soil and geologic factors.

   B. An as-graded grading plan prepared by the Civil Engineer, including original ground surface elevations, as graded ground surface elevations, lot drainage patterns and locations and elevation of all surface and subsurface drainage facilities.

   C. An as-built erosion and sediment control plan prepared by the Civil Engineer.

*****This form shall not be changed except where a blank exists. If a change is made to this form, the permit shall be void. *****

Print Reset

THE CITY OF BRENTWOOD
HERITAGE • VISION • OPPORTUNITY

Encroachment Permit Application

Public Works Department
Engineering Division
Effective: July 1, 2007
Revised: August 1, 2016

Assigned Permit No._____

Applicant: _____	Contractor: _____
Contact Name: _____	Contact Name: _____
Address: _____	Address: _____
_____	_____
Phone: _____	Phone: _____
Email: _____	Email: _____
Contractor License No.: _____	Business License No: _____

Location of Work: _____	Cost Estimate: _____
Cross Street: _____	Estimated Completion Date: _____

Description of Work:

Applicable Standard Details and Special Provisions Notes:

I hereby certify that all information provided in this application is true and complete and I agree to comply with the all conditions attached to the permit and on the reverse side hereof.

Applicant's Signature:_____ **Date:**_____

FEE CALCULATION		**PERMIT APPROVED:**
Processing:	$ _____	_____
Inspection Fee:	$ _____	City Engineer Date
Bond:	$ _____	
Other:	$ _____	
Total Fee:	**$**	

*****This form is for application submittal purposes only *****

ENCROACHMENT PERMIT NOTES

PER CHAPTER 12.08 OF TITLE 12 OF THE CITY OF BRENTWOOD MUNICIPAL CODE, ENGINEERING PROCEDURES MANUAL AND STANDARD PLANS & SPECIFICATION

1. Permittee shall notify an Engineering inspector to set up a pre-construction meeting at least 48 hours prior to the start of any work. The name and phone number of the assigned inspector will be provided on the permit. This condition also applies to restart of the job when closed down by rain or other reasons for more than 10 days.

2. The permittee shall begin the work or use authorized by this permit within 30 calendar days from date issuance, unless a different period is stated in the permit. If the work or use is not begun accordingly, then the permit shall become void.

3. The permittee shall complete the work or use authorized by a permit issued pursuant to this chapter within the time and according to the terms specified in the permit. If work is unduly delayed by the permittee and if the interest of the public reasonably so demand, the city engineer shall have authority to complete the work or any portion thereof. The actual cost is such work by the city plus twenty percent as an overhead charge shall be charged to and paid by the permittee or his surety.

4. The permittee shall keep this permit at the site at work and the permit must be shown to any authorized representative of the City of Brentwood or the law enforcement officer on demand.

5. Permits shall be issued only to the person making application therefore and may not be assigned to another person or location by the permittee. If any permittee assigns his permit to another person or another location, the permit shall become void.

6. The Permittee shall be responsible for all liability for personal injury or property damage which may result from work permitted and done by the permittee or the failure of permittee to perform its obligations under the permit. If any claim of liability is made against the City, its officers or employees, the permittee shall defend, indemnify and hold them, and each of them, harmless from such claim insofar as permitted by law.

7. The applicant must file with the City Engineer a form approved by the City that is payable to the City of Brentwood in an amount equal to the cost of the work, up to a 20% contingency. Upon satisfactory completion of all work and receipt of a Maintenance Bond in amount up to 20% of the cost of the work, the original form of security will be released. The Maintenance Bond will be held for a period of one (1) year. The City may proceed against the security posted for actual costs incurred by the City associated with any non-compliance by applicant/permittee for permit or project conditions. In the event of a bond having been posted, the City may proceed against the surety and principal for the actual cost to the City plus 20%.

8. The permittee will provide and maintain insurance in the following types with the following limits:

General Permittee

a) Commercial Liability Insurance, occurrence form, with a limit of not less than $1,000,000.00-$2,000,000.00 (dependent upon the size of the project) each occurrence. If such insurance contains a general aggregate limit, it shall apply separately to this permit or b e no less than two (2) times the occurrence limit. A Certificate of Liability shall be submitted with the City of Brentwood as Additional Insured. It must also include the Additional Insured Endorsement, without the Endorsement the Insurance will be considered invalid.

b) Automobile Liability Insurance, occurrence form, with a limit of not less than $1,000,000.00 each occurrence. Such insurance shall include coverage for owned, hired and non-owned automobiles.

c) Workers Compensation in at least the minimum statutory limits.

d) Employers' liability insurance, with minimum limits of $1 million per occurrence.

Homeowner Permittee

a) At the City's discretion, the City of Brentwood may allow copies of Home Owner Insurance certificates for review and file dependent upon the size and scope of work being proposed.

9. Any encroachment permit may be revoked at any time at the option of the City Engineer, whenever:

   (1) It appears to the City Engineer that the continuing allowance of the encroachment, whether because of changed conditions or otherwise, interferes with the full, adequate or safe public use of the right-of-way or watercourse involved: and/or

   (2) The permittee fails to comply with or violates any City Ordinance, City standards, safety regulations, or any condition of issuance of the permits.

10. Upon revocation of the permit, the permittee shall immediately restore the public right-of-way or watercourse to a condition as required by the City Engineer. If the restoration is not completed within the time specified by the City Engineer, the City may take any and all necessary action so required to restore the right-of-way or watercourse. Any and all costs incurred by the City for the enforcement of this Section shall be at the expense of the permittee. Cost incurred by the City will be deducted from any deposits and/or bonds posted by the permittee and, if necessary, recovered by legal action.

11. The City Engineer is designated as the enforcement authority for violations determined at his/her sole discretion. Enforcement actions shall be as outlined in City Policies and procedures. Notwithstanding any City procedure that may be in effect, violations deemed an issue of public health or safety may be subject to immediate work stoppage.

12. Notify Underground Service Alert 48 hours prior to any excavation at (800) 642-2444.

13. All work performed under this permit is to be in accordance with the City of Brentwood Standard Plans and Specifications, subject to the inspection and approval of the City Engineer.

14. No changes may be made in the location, dimension, character or duration of the encroachment or use as granted by the permit except upon written authorization of the City Engineer.

15. The granting of the permit does not relieve the applicant of the responsibility of obtaining any other permit required by other public or private agencies, or individuals, i.e. Caltrans, CCCFC & WCD, Corps of Engineers, Dept. of Fish and Game, etc.

16. All site safety measures are the applicant's responsibility, including providing, erecting, and maintaining all warning signs, lights, barriers, or other devices necessary for the protection of the public. When working a city street, at least one 12 foot wide traffic lane shall be open at all times.

17. An approved Traffic control plan must be in place prior to start of work affecting the public right of way.

18. Temporary paving of a minimum of 2 inches of asphalt concrete shall be placed on all excavations within the street at the end of each day's work. It shall be kept in good repair at all times, and when directed by the Engineering Inspector, immediate attention shall be given to correct any noted deficiencies.

19. The hours of work within the public right-of–way shall be the regular hours of 7:00 A.M. to 3:30 P.M., Monday through Friday (excluding holidays). The owner or developer must submit a written request for approval by the City Engineer at least two (2) working days in advance to work during any other hours, weekends, or holidays. Work on days other than regular workdays requires additional compensation for overtime inspection and written approval from the City.

    The following special hours of work will be enforced from Monday through Friday:

    (1) Work affecting traffic on Balfour Road, Brentwood Boulevard, Fairview Avenue, Lone Tree Way, Sand Creek Road, Central Boulevard or Walnut Boulevard will be limited to 9:00 am to 3:00

    (2) Work adjacent to or within fifteen hundred feet (1500') of any school while school is in session will be limited to 9:00 am to 3:00 pm.

    (3) Work within three hundred feet (300') of occupied residential units and not affecting Balfour Road, Brentwood Boulevard, Fairview Avenue, Lone Tree Way or Walnut Boulevard, south of Balfour Road will be limited to 8:00 am to 4:30 pm.

    (4) Work in excess of three hundred feet (300') from occupied residential units and not affecting Balfour Road, Brentwood Boulevard, Fairview Avenue, Lone Tree Way or Walnut Boulevard, south of Balfour Road, will be limited to 7:00 am to 5:00 pm.

    (5) All Saturday work shall be restricted to 9:00 am to 4:00 pm.

20. Upon completion of the work the applicant shall clean the right-of-way of all rubbish, debris, trees, brush, excess materials, temporary structures and equipment. Grounds and landscaping shall be restored to the approval of the property owner.

21. Any individual or corporation contracting work within the City of Brentwood is required to have a current City of Brentwood business license.

Print | Submit by E-mail

THE CITY OF BRENTWOOD
HERITAGE • VISION • OPPORTUNITY

Transportation Permit

Public Works Department
Engineering Division
Effective: July 1, 2007 / Revised: January 1, 2018

Permit No: _____ Permit Valid _____ to _____

Leave Blank - City to Assign Permit No.

Applicant Name: _____	Contractor Name: _____
Address: _____	Address: _____
Phone: _____ Fax: _____	Phone: _____ Fax: _____
E-mail: _____	E-mail: _____
Insurance: ☐ YES ☐ NO	Insurance: ☐ YES ☐ NO

Description of Load or Equipment and Model No. _____

Load Dimensions: _____ Equipment Description: _____

Vehicle Width: _____ Kingpin to Rear Axle Length: _____ Semi Trailer Length: _____ Combo Vehicle Length: _____

MAXIMUM: Weight _____ Height _____ Width _____ Length _____

AXLE NUMBER	**1**	**2**	**3**	**4**	**5**	**6**	**7**	**8**	**9**
Number of Tires per Axle									
Distance between Axles									
Width of Axles at Tire Sidewall									

APPROVED TRUCK ROUTES: Lone Tree Way and Brentwood Boulevard

GENERAL CONDITIONS: No hauling between the hours of 7:00 - 9:00 a.m. and 3:30 - 6:00 p.m., Monday - Friday.

☐ **By checking this box, I hereby certify that all information provided in this application is true and complete and I agree to comply with the conditions listed herein.**

Submitted by: _____ Date: _____

PILOT VEHICLE REQUIRED: ☐ **NONE** ☐ **ONE** ☐ **TWO**

INBOUND: _____

OUTBOUND: _____

OTHER REQUIRED PERMITS: ☐ YES ☐ NO List Here: _____

PERMIT APPROVED BY/FOR CITY TRAFFIC ENGINEER: _____ Date: _____

TOTAL PERMIT FEE $16.00

TRANSPORTATION PERMIT NOTES

1. Applicant is responsible for obtaining all necessary permits that are required.

2. The permittee shall begin the work or use authorized by this permit within 30 calendar days from date issuance, unless a different period is stated in the permit. If the work or use is not begun accordingly, then the permit shall become void.

3. The permittee shall complete the work or use authorized by a permit issued pursuant to this chapter within the time and according to the terms specified in the permit. If work is unduly delayed by the permittee and if the interest of the public reasonably so demand, the city engineer shall have authority to complete the work or any portion thereof. The actual cost is such work by the city plus twenty percent as an overhead charge shall be charged to and paid by the permittee or his surety.

4. The permittee shall keep this permit at the site at work and the permit must be shown to any authorized representative of the City of Brentwood or the law enforcement officer on demand.

5. Permits shall be issued only to the person making application therefore and may not be assigned to another person or location by the permittee. If any permittee assigns his permit to another person or another location, the permit shall become void.

6. The permittee will hold the City of Brentwood and its officers and employees harmless from and will indemnify them against all claims, liability and loss, and in particular from and against all such claims, liability and loss predicated on active or passive negligence of the City of Brentwood resulting directly or indirectly from operations under an issued encroachment permit. This hold harmless obligation shall not terminate during the life of the permit. The permittee shall inform himself as to the existence and location of all underground facilities and protect the same against damage. The permittee shall not interfere with any existing utility without the written consent of the City Engineer and owner of the utility. If it is necessary to relocate an existing utility, such relocation shall be done by the owner. No utility owned by the City shall be moved to accommodate the permittee, unless the cost of such work is borne by the permittee. The cost of moving privately owned utilities shall be similarly borne by the permittee, unless other contractual arrangements are made. The permittee shall support and protect all pipes, conduits, poles, wires, or other underground structures affected by excavation work, and shall inform the owner if any damage occurs to such facilities during the conduct of the work. All repairs, including replacement of protective pipe coatings shall be made by the owner of the damaged facilities, unless other arrangements are made. The expense of repairs of any damage shall be charged to the permittee. If any claim as such liability is made against the City of Brentwood, its officers or employees, permittee shall defend, indemnify and hold them, and each of them harmless from such claim.

7. The applicant must file with the City Engineer a bond or cashier's check payable to the City of Brentwood in an amount equal to the cost of the work plus twenty per cent. Upon satisfactory completion of all work and receipt of a Maintenance Bond in amount equal to 20% of the cost of the work, the bond or cash deposit shall be released. The Maintenance Bond will be held for a period of one (1) year. In the event of noncompliance, the City may deduct from the cash deposit the actual cost incurred by the City pursuant to Section 12.08.150 of the Brentwood Municipal Code. In the event of a bond having been posted, the City may proceed against the surety and principal for the actual cost to the City plus twenty percent.

8. The permittee will provide and maintain insurance in the following types with the following limits:

   General Permittee
   a) Commercial Liability Insurance, occurrence form, with a limit of not less than $1,000,000.00-$2,000,000.00 (dependent upon the size of the project) each occurrence. If such insurance contains a general aggregate limit, it shall apply separately to this permit or b e no less than two (2) times the occurrence limit. A Certificate of Liability shall be submitted with the City of Brentwood as Additional Insured. It must also include the Additional Insured Endorsement, without the Endorsement the Insurance will be considered invalid.
   b) Automobile Liability Insurance, occurrence form, with a limit of not less than $1,000,000.00 each occurrence. Such insurance shall include coverage for owned, hired and non-owned automobiles.
   c) Workers Compensation in at least the minimum statutory limits.
   d) Employers' liability insurance, with minimum limits of $1 million per occurrence.

   Homeowner Permittee
   Consideration will be given to projects where home owners are involved and the City of Brentwood will require copies of home owner's insurance certificates for review and file dependent upon the size of the proposed project.

9. Any encroachment permit may be revoked at any time at the option of the City Engineer, whenever:
   (1) It appears to the City Engineer that the continuing allowance of the encroachment, whether because of changed conditions or otherwise, interferes with the full, adequate or safe public use of the right-of-way or watercourse involved: and/or
   (2) The permittee fails to comply with or violates any City Ordinance, City standards, safety regulations, or any condition of issuance of the permits.

10. Upon revocation of the permit, the permittee shall immediately restore the public right-of-way or watercourse to a condition as required by the City Engineer. If the restoration is not completed within the time specified by the City Engineer, the City may take any and all necessary action so required to restore the right-of-way or watercourse. Any and all costs incurred by the City for the enforcement of this Section shall be at the expense of the permittee. Cost incurred by the City will be deducted from any deposits and/or bonds posted by the permittee and, if necessary, recovered by legal action.

11. Notify Underground Service Alert 48 hours prior to any excavation at (800) 642-2444.

12. All work performed under this permit is to be in accordance with the standard plans and specifications of the Engineering Department of the City of Brentwood, subject to the inspection and approval of the City Engineer.

13. No changes may be made in the location, dimension, character or duration of the encroachment or use as granted by the permit except upon written authorization of the City Engineer.

14. The granting of the permit does not relieve the applicant of the responsibility of obtaining any other permit required by other public or private agencies, or individuals, i.e. CCCFC & WCD, Corps of Engineers, Dept. of Fish and Game, etc.

15. All site safety measures are the applicant's responsibility, including providing, erecting, and maintaining all warning signs, lights, barriers, or other devices necessary for the protection of the public. When working a city street, at least one 12 foot wide traffic lane shall be open at all times.

16. An approved Traffic control plan must be in place prior to start of work affecting the public right of way.

17. Temporary paving of a minimum of 2 inches of asphalt concrete shall be placed on all excavations within the street at the end of each day's work. It shall be kept in good repair at all times, and when directed by the Engineering Inspector, immediate attention shall be given to correct any noted deficiencies.

18. The hours of work within the public right-of–way shall be the regular hours of 7:00 A.M. to 3:30 P.M., Monday through Friday (excluding holidays). The owner or developer must submit a written request for approval by the City Engineer at least two (2) working days in advance to work during any other hours, weekends, or holidays. Work on days other than regular workdays requires additional compensation for overtime inspection and written approval from the City.

    The following special hours of work will be enforced from Monday through Friday:
    (1) Work affecting traffic on Balfour Road, Brentwood Boulevard, Fairview Avenue, Lone Tree Way, Sand Creek Road, Central Boulevard or Walnut Boulevard will be limited to 9:00 am to 3:00
    (2) Work adjacent to or within fifteen hundred feet (1500') of any school while school is in session will be limited to 9:00 am to 3:00 pm.

Lake and Streambed Alteration Agreement (CDFW)

California Natural Resources Agency
DEPARTMENT OF FISH AND WILDLIFE
Bay Delta Region
7329 Silverado Trail
Napa, CA 94558
(707) 944-5500
www.wildlife.ca.gov

***EDMUND G. BROWN, Jr.**, Governor*
CHARLTON H. BONHAM, Director

December 5, 2017

Mike Carlson
Contra Costa County Flood Control and Water Conservation District
255 Glacier Drive
Martinez, CA 94533

Dear Mr. Carlson:

Notification of Lake or Streambed Alteration, Notification No. 1600-2017-0423-R3, Three Creeks Restoration Project impacting Marsh Creek, tributary to , Big Break

The California Department of Fish and Wildlife (CDFW) had until December 4, 2017 to submit a draft Lake or Streambed Alteration Agreement (Agreement) to you or inform you that an Agreement is not required. CDFW did not meet that date. As a result, by law, you may now complete the project described in your notification without an Agreement.

Please note that pursuant to Fish and Game Code section 1602, subdivision (a)(4)(D), if you proceed with this project, it must be the same as described and conducted in the same manner as specified in the notification and any modifications to that notification received by CDFW in writing prior to December 04, 2017. This includes completing the project within the proposed term and seasonal work period and implementing all avoidance and mitigation measures to protect fish and wildlife resources specified in the notification. If the term proposed in your notification has expired, you will need to re-notify CDFW before you may begin your project. Beginning or completing a project that differs in any way from the one described in the notification may constitute a violation of Fish and Game Code section 1602.

Also note that while you are entitled to complete the project without an Agreement, you are still responsible for complying with other applicable local, state, and federal laws. These include, but are not limited to, the state and federal Endangered Species Acts and Fish and Game Code section 5650 (water pollution) and section 5901 (fish passage).

Finally, if you decide to proceed with your project without an Agreement, you must have a copy of this letter and your notification with all attachments available at all times at the work site.

If you have any questions regarding this letter, please contact Melissa Farinha, Senior Environmental Scientist (Supervisory) at (707) 944-5579 or by email at melissa.farinha@wildlife.ca.gov .

Sincerely,

Randi Adair

for James Starr, Environmental Program Manager

cc: Restoration Design Group
Rich Walkling
rich@rdgmail.com

California Department of Fish and Wildlife
Lieutenant Garrett
Warden Jacobsen

FOR DEPARTMENT USE ONLY				
Date Received	Amount Received	Amount Due	Date Complete	Notification No.
9-5-17	$ 5,000	$		1600-2017-0423-R3

Melissa Farinha

Lt. Clint Garrett
WLO- Jessica Jacobsen

STATE OF CALIFORNIA
DEPARTMENT OF FISH AND WILDLIFE

NOTIFICATION OF LAKE OR STREAMBED ALTERATION

Complete EACH field, unless otherwise indicated, following the enclosed instructions and submit ALL required enclosures. Attach additional pages, if necessary.

1. APPLICANT PROPOSING PROJECT

Name	Mike Carlson		
Business/Agency	Contra Costa Country Flood Control and Water Conservation District		
Street Address	255 Glacier Drive		
City, State, Zip	Martinez, CA 94553		
Telephone	925.313.2000	Fax	
Email	mike.carlson@pw.cccounty.us		

Fish & Wildlife
SEP 05 2017
Napa

2. CONTACT PERSON (*Complete only if different from applicant*)

Name	Rich Walkling, Restoration Design Group		
Street Address	2612 8th Street, Suite B		
City, State, Zip	Berkeley, CA 94710		
Telephone	510.644.2798 x5	Fax	510.644.2799
Email	rich@rdgmail.com		

3. PROPERTY OWNER (*Complete only if different from applicant*)

Name			
Street Address			
City, State, Zip			
Telephone		Fax	
Email			

4. PROJECT NAME AND AGREEMENT TERM

A. Project Name	Three Creeks Parkway Restoration Project			
B. Agreement Term Requested	☑ Regular (*5 years or less*) ☐ Long-term (*greater than 5 years*)			
C. Project Term		D. Seasonal Work Period		E. Number of Work Days
Beginning (*year*)	Ending (*year*)	Start Date (*month/day*)	End Date (*month/day*)	
2018	2023	5/1	10/31	140

5. AGREEMENT TYPE

Check the applicable box. If box B, C, D, or E is checked, complete the specified attachment.		
A.	☑ Standard *(Most construction projects, excluding the categories listed below)*	
B.	☐ Gravel/Sand/Rock Extraction (*Attachment A*)	*Mine I.D. Number:* _____
C.	☐ Timber Harvesting (*Attachment B*)	THP *Number:* _____
D.	☐ Water Diversion/Extraction/Impoundment (*Attachment C*)	*SWRCB Number:* _____
E.	☐ Routine Maintenance (*Attachment D*)	
F.	☐ CDFW Fisheries Restoration Grant Program (FRGP)	*FRGP Contract Number* _____
G.	☐ Master	
H.	☐ Master Timber Harvesting	

6. FEES

Please see the current fee schedule to determine the appropriate notification fee. Itemize each project's estimated cost and corresponding fee. ***Note: The Department may not process this notification until the correct fee has been received.***

	A. Project	B. Project Cost	C. Project Fee
1	Three Creeks Parkway Restoration Project	>$350,000	$5,000
2			
3			
4			
5			
		D. Base Fee *(if applicable)*	
		E. TOTAL FEE ENCLOSED	$5,000

7. PRIOR NOTIFICATION OR ORDER

A. Has a notification previously been submitted to, or a Lake or Streambed Alteration Agreement previously been issued by, the Department for the project described in this notification?

☐ Yes (*Provide the information below*) ☑ No

Applicant: _____ Notification Number: _____ Date: _____

B. Is this notification being submitted in response to an order, notice, or other directive ("order") by a court or administrative agency (including the Department)?

☑ No ☐ Yes (*Enclose a copy of the order, notice, or other directive. If the directive is not in writing, identify the person who directed the applicant to submit this notification and the agency he or she represents, and describe the circumstances relating to the order.*)

☐ *Continued on additional page(s)*

8. PROJECT LOCATION

A. Address or description of project location.
(Include a map that marks the location of the project with a reference to the nearest city or town, and provide driving directions from a major road or highway)

From southbound California Highway 4, turn left onto Balfour Road in Brentwood. Travel eastbound one mile to Minnesota Avenue. Take a left onto Minnesota Avenue. Travel 0.5 miles to Central Boulevard. Turn right onto Central Boulevard. Travel 0.3 miles to Marsh Creek. Immediately after crossing the Central Boulevard Bridge over Marsh Creek, turn left into the Marsh Creek Staging Area. The project site is accessible by the Marsh Creek Regional Trail. It extends approximately 1,000 feet upstream from Central Boulevard (to Dainty Aveune) and 3,000 feet downstream to just upstream of the railroad tracks.

See map in attachment - 8. Project Location

☑ *Continued on additional page(s)*

B. River, stream, or lake affected by the project.	Marsh Creek
C. What water body is the river, stream, or lake tributary to?	Western Delta (5 miles downstream)
D. Is the river or stream segment affected by the project listed in the state or federal Wild and Scenic Rivers Acts?	☐ Yes ☑ No ☐ Unknown
E. County	Contra Costa

F. USGS 7.5 Minute Quad Map Name	G. Township	H. Range	I. Section	J. ¼ Section
Brentwood				

☐ *Continued on additional page(s)*

K. Meridian (*check one*) ☐ Humboldt ☑ Mt. Diablo ☐ San Bernardino

L. Assessor's Parcel Number(s)

Project: 017-17C-004, 017-20C-XXX Staging: 017-210-004, 017-201-038, 017-260-080, 017-280-113, 017-110-011, 017-170-008, 017-170-007

☐ *Continued on additional page(s)*

M. Coordinates (*If available, provide at least latitude/longitude or UTM coordinates and check appropriate boxes)*

Latitude/Longitude	*Latitude:* 37.938389	*Longitude:* -121.707037	
	☐ Degrees/Minutes/Seconds	☑ Decimal Degrees	☐ Decimal Minutes
UTM	*Easting:*	*Northing:*	☐ Zone 10 ☐ Zone 11
Datum used for Latitude/Longitude or UTM	☐ NAD 27	☑ NAD 83 or WGS 84	

9. PROJECT CATEGORY AND WORK TYPE *(Check each box that applies)*

PROJECT CATEGORY	NEW CONSTRUCTION	REPLACE EXISTING STRUCTURE	REPAIR/MAINTAIN EXISTING STRUCTURE
Bank stabilization – bioengineering/recontouring	✓	☐	☐
Bank stabilization – rip-rap/retaining wall/gabion	✓	☐	☐
Boat dock/pier	☐	☐	☐
Boat ramp	☐	☐	☐
Bridge	☐	☐	☐
Channel clearing/vegetation management	☐	☐	☐
Culvert	☐	☐	☐
Debris basin	☐	☐	☐
Dam	☐	☐	☐
Diversion structure – weir or pump intake	☐	☐	☐
Filling of wetland, river, stream, or lake	☐	☐	☐
Geotechnical survey	☐	☐	☐
Habitat enhancement – revegetation/mitigation	✓	☐	☐
Levee	☐	☐	☐
Low water crossing	☐	☐	☐
Road/trail	✓	☐	☐
Sediment removal – pond, stream, or marina	☐	☐	☐
Storm drain outfall structure	☐	☐	☐
Temporary stream crossing	✓	☐	☐
Utility crossing : Horizontal Directional Drilling	☐	☐	☐
Jack/bore	☐	☐	☐
Open trench	☐	☐	☐
Other *(specify)*:	☐	☐	☐

10. PROJECT DESCRIPTION

A. Describe the project in detail. Photographs of the project location and immediate surrounding area should be included.

- Include any structures (e.g., rip-rap, culverts, or channel clearing) that will be placed, built, or completed in or near the stream, river, or lake.
- Specify the type and volume of materials that will be used.
- If water will be diverted or drafted, specify the purpose or use.

Enclose diagrams, drawings, plans, and/or maps that provide all of the following: site specific construction details; the dimensions of each structure and/or extent of each activity in the bed, channel, bank or floodplain; an overview of the entire project area (i.e., "bird's-eye view") showing the location of each structure and/or activity, significant area features, and where the equipment/machinery will enter and exit the project area.

See attachment - 10. Project Description

☑ *Continued on additional page(s)*

B. Specify the equipment and machinery that will be used to complete the project.

Actual equipment to be determined by the bid award contractor. Equipment will likely include: long arm excavators, backhoes, loaders, and a variety of small equipment.

☐ *Continued on additional page(s)*

C. Will water be present during the proposed work period (specified in box 4.D) in the stream, river, or lake (specified in box 8.B).	☑ Yes ☐ No (*Skip to box 11*)
D. Will the proposed project require work in the wetted portion of the channel?	☑ Yes (*Enclose a plan to divert water around work site*) ☐ No

11. PROJECT IMPACTS

A. Describe impacts to the bed, channel, and bank of the river, stream, or lake, and the associated riparian habitat. Specify the dimensions of the modifications in length (linear feet) and area (square feet or acres) and the type and volume of material (cubic yards) that will be moved, displaced, or otherwise disturbed, if applicable.

See attachment - 11A. Project Impacts

☑ *Continued on additional page(s)*

B. Will the project affect any vegetation? ☑ Yes (*Complete the tables below*) ☐ No

Vegetation Type	Temporary Impact	Permanent Impact
Ruderal grassland	Linear feet: 4,050 Total area: 7 acres	Linear feet: Total area:
	Linear feet: Total area:	Linear feet: Total area:

Tree Species	Number of Trees to be Removed	Trunk Diameter (range)
non-native ornamental species	3	6"-18"

☐ *Continued on additional page(s)*

C. Are any special status animal or plant species, or habitat that could support such species, known to be present on or near the project site?

☑ Yes *(List each species and/or describe the habitat below)* ☐ No ☐ Unknown

See attachment - 11C. Special Status Species

☐ *Continued on additional page(s)*

D. Identify the source(s) of information that supports a "yes" or "no" answer above in Box 11.C.

Wood Biological, 2016. Biological Assessment for the Three Creeks Restoration Project

☐ *Continued on additional page(s)*

E. Has a biological study been completed for the project site?

☑ Yes (*Enclose the biological study*) ☐ No

Note: A biological assessment or study may be required to evaluate potential project impacts on biological resources.

F. Has a hydrological study been completed for the project or project site?

☑ Yes (*Enclose the hydrological study*) ☐ No

Note: A hydrological study or other information on site hydraulics (e.g., flows, channel characteristics, and/or flood recurrence intervals) may be required to evaluate potential project impacts on hydrology.

12. MEASURES TO PROTECT FISH, WILDIFE, AND PLANT RESOURCES

A. Describe the techniques that will be used to prevent sediment from entering watercourses during and after construction.

See attachment 12A. Techniques to Prevent Sediment from Entering Watercourses

☑ *Continued on additional page(s)*

B. Describe project avoidance and/or minimization measures to protect fish, wildlife, and plant resources.

See attachment 12B. Project Avoidance and/or Minimization Measures

☑ *Continued on additional page(s)*

C. Describe any project mitigation and/or compensation measures to protect fish, wildlife, and plant resources.

N/A - Project is designed to be a self-mitigating restoration project.

☐ *Continued on additional page(s)*

13. PERMITS

List any local, state, and federal permits required for the project and check the corresponding box(es). Enclose a copy of each permit that has been issued.

A. Army Corps 404 ☑ Applied ☐ Issued

B. RWQCB 401 ☑ Applied ☐ Issued

C. East County HCP - Planning Survey Report ☑ Applied ☐ Issued

D. Unknown whether ☐ local, ☐ state, or ☐ federal permit is needed for the project. (*Check each box that applies*)

☐ *Continued on additional page(s)*

14. ENVIRONMENTAL REVIEW

A. Has a draft or final document been prepared for the project pursuant to the California Environmental Quality Act (CEQA), National Environmental Protection Act (NEPA), California Endangered Species Act (CESA) and/or federal Endangered Species Act (ESA)?

☑ Yes (*Check the box for each CEQA, NEPA, CESA, and ESA document that has been prepared and enclose a copy of each*)

☐ No (*Check the box for each CEQA, NEPA, CESA, and ESA document listed below that will be or is being prepared*)

☐ Notice of Exemption	☑ Mitigated Negative Declaration	☐ NEPA document (*type*): _____
☐ Initial Study	☐ Environmental Impact Report	☐ CESA document (*type*): _____
☐ Negative Declaration	☐ Notice of Determination (*Enclose*)	☐ ESA document (*type*): _____
☐ THP/ NTMP	☐ Mitigation, Monitoring, Reporting Plan	

B. State Clearinghouse Number (*if applicable*)	2016082008		
C. Has a CEQA lead agency been determined?	☑ Yes (*Complete boxes D, E, and F*)	☐ No (*Skip to box 14.G*)	
D. CEQA Lead Agency	Contra Costa County Department of Conservation and Development		
E. Contact Person	Claudia Gemberling	F. Telephone Number	925-313-2192

G. If the project described in this notification is part of a larger project or plan, briefly describe that larger project or plan.

☐ *Continued on additional page(s)*

H. Has an environmental filing fee (Fish and Game Code section 711.4) been paid?

☐ Yes (*Enclose proof of payment*) ☑ No (*Briefly explain below the reason a filing fee has not been paid*)

Contra Costa County has not yet issued the NOD. When it does, it will pay the environmental filing fee and submit proof of payment to CDFW.

Note: If a filing fee is required, the Department may not finalize a Lake or Streambed Alteration Agreement until the filing fee is paid.

15. SITE INSPECTION

Check one box only.

☑ In the event the Department determines that a site inspection is necessary, I hereby authorize a Department representative to enter the property where the project described in this notification will take place at any reasonable time, and hereby certify that I am authorized to grant the Department such entry.

☐ I request the Department to first contact (*insert name*) _____ at (*insert telephone number*) _____ to schedule a date and time to enter the property where the project described in this notification will take place. I understand that this may delay the Department's determination as to whether a Lake or Streambed Alteration Agreement is required and/or the Department's issuance of a draft agreement pursuant to this notification.

16. DIGITAL FORMAT

Is any of the information included as part of the notification available in digital format (i.e., CD, DVD, etc,)?

☑ Yes (Please enclose the information via digital media with the completed notification form)

☐ No

17. SIGNATURE

I hereby certify that to the best of my knowledge the information in this notification is true and correct and that I am authorized to sign this notification as, or on behalf of, the applicant. I understand that if any information in this notification is found to be untrue or incorrect, the Department may suspend processing this notification or suspend or revoke any draft or final Lake or Streambed Alteration Agreement issued pursuant to this notification. I understand also that if any information in this notification is found to be untrue or incorrect and the project described in this notification has already begun, I and/or the applicant may be subject to civil or criminal prosecution. I understand that this notification applies only to the project(s) described herein and that I and/or the applicant may be subject to civil or criminal prosecution for undertaking any project not described herein unless the Department has been separately notified of that project in accordance with Fish and Game Code section 1602 or 1611.

Signature of Applicant or Applicant's Authorized Representative

Date 8/31/17

for Mike Carlson

Print Name

401 Water Quality Certification (CVRWQCB)

16 March 2018

Mike Carlson
Contra Costa Flood Control District
255 Glacier Drive
Martinez, CA 94553

CERTIFIED MAIL
91 7199 9991 7036 6989 1315

CLEAN WATER ACT SECTION 401 WATER QUALITY CERTIFICATION AND ORDER FOR THE THREE CREEKS PARKWAY RESTORATION PROJECT, CONTRA COSTA COUNTY (WDID#5B07CR00187)

Enclosed please find a Clean Water Act Section 401 Water Quality Certification and Order, authorized by Central Valley Regional Water Quality Control Board Executive Officer, Pamela C. Creedon. This Order is issued to Contra Costa Flood Control for Three Creeks Parkway Restoration Project (Project). Attachments A through F of the Enclosure are also part of the Order.

This Order is issued in response to an application submitted by Contra Costa Flood Control District for proposed Project discharges to waters of the state, to ensure that the water quality standards for all waters of the state impacted by the Project are met. You may proceed with your Project according to the terms and conditions of the enclosed Order.

Please review your Order carefully to ensure that you understand all aspects of the Order. Note that this Order requires reporting and notification. Requirements for the content of the reporting and notification requirements are detailed in Attachment D, including specifications for photo and map documentation during the Project. Written reports and notifications must be submitted using the Reporting and Notification Cover Sheet located in Attachment D, which must be signed by the Permittee or an authorized representative.

These reports, notifications, and other submissions must be submitted in a searchable Portable Document Format (PDF). Documents less than 50 MB must be emailed to: centralvalleysacramento@waterboards.ca.gov. In the subject line of the email, include the Central Valley Water Board Contact, Project name, and WDID. Documents that are 50 MB or larger must be transferred to a disk and mailed to the Central Valley Water Board Contact.

If you require further assistance, please contact me by phone at (916) 464-4856 or by email at Nicholas.White@waterboards.ca.gov. You may also contact Elizabeth Lee, Unit Supervisor, by phone at (916) 464-4787 or by email at Elizabeth.Lee@waterboards.ca.gov.

Original Signed By:

Nicholas White
Water Resource Control Engineer
401 Water Quality Certification Unit

Enclosures (1): Order for Three Creeks Parkway Restoration Project

cc: [Via email only] (w/ enclosure):

Sam Ziegler (Electronic Copy Only)
United States Environmental Protection Agency
Ziegler.Sam@epa.gov

California Department of Fish and Wildlife, Region 3
AskBDR@wildlife.ca.gov

CWA Section 401 WQC Program
Division of Water Quality
State Water Resources Control Board
Stateboard401@waterboards.ca.gov

Elizabeth Lee
Unit Supervisor
Central Valley Regional Water Quality Control Board, Sacramento
Elizabeth.Lee@waterboards.ca.gov

cc: (w/ enclosure):
Bill Guthrie
United States Army Corps of Engineers
Sacramento District Headquarters
1325 J Street, Room 1350
Sacramento, CA 95814-2922

Bill Jennings
CA Sportfishing Protection Alliance
3536 Rainier Avenue
Stockton, CA 95204

CLEAN WATER ACT SECTION 401 WATER QUALITY CERTIFICATION AND ORDER

Reg. Meas. ID:	416152
Place ID:	830777
WDID:	5B07CR00187
USACOE#:	SPK-2016-00934

Effective Date: 16 March 2018

Expiration Date: 15 March 2023

Program Type: Restoration

Project Type: Ecological Aquatic/Stream/Habitat Restoration

Project: Three Creeks Parkway Restoration Project (Project)

Applicant: Contra Costa County Flood Control

Applicant Contact: Mike Carlson
255 Glacier Drive
Martinez, CA 94553
Phone: (925) 313-2000
Email: mike.carlson@pw.cccounty.us

Applicant's Agent: Restoration Design Group
Rich Walking
2612 8th Street, Suite B
Berkeley, CA 94710
Phone: (510) 644-2798 x5
Email: rich@rdgmail.com

Water Board Staff: Nicholas White
Water Resource Control Engineer
11020 Sun Center Drive, Suite 200
Rancho Cordova, CA 95670
Phone: (916) 464-4856
Email: Nicholas.White@waterboards.ca.gov

Water Board Contact Person:
If you have any questions, please call Central Valley Regional Water Quality Control Board (Central Valley Water Board) Staff listed above or (916) 464-3291 and ask to speak with the Water Quality Certification Unit Supervisor.

Table of Contents

I. Order

This Clean Water Act (CWA) section 401 Water Quality Certification action and Order (Order) is issued at the request of Contra Costa County Flood Control (herein after Permittee) for the Project. This Order is for the purpose described in application and supplemental information submitted by the Permittee. The application was received on 14 December 2016. The application was deemed complete on 1 November 2017. Prior to receiving a complete application, Central Valley Water Board staff issued a notice of incomplete application and the Permittee responded to the request for application information on the following dates (Table 1).

Table 1: Record of Notice(s) of Incomplete Application

Date of Notice of Incomplete Application	Date all requested information was received.
30 January 2017	12 December 2017

Central Valley Water Board staff requested additional information necessary to supplement the contents of the complete application and the Permittee responded to the request for supplemental information on the following dates (Table 2).

Table 2: Record of Supplemental Application Information

Date of Request for Supplemental Information	Date all requested information was received.
9 January 2018	19 January 2018

Additionally, Central Valley Water Board Staff issued a Denial without Prejudice on 26 July 2017

II. Public Notice

The Central Valley Water Board provided public notice of the application pursuant to California Code of Regulations, title 23, section 3858 from 8 September 2017 to 29 September 2017. The Central Valley Water Board did not receive any comments during the comment period.

III. Project Purpose

The Three Creeks Parkway Restoration Project will allow for the improvement of flood conveyance capacity and restoration of ecological function along approximately 4,000 linear feet of Marsh Creek.

IV. Project Description

The 14-acre Project is a multi-benefit flood control and creek restoration project. The Project will improve flood conveyance capacity and restore ecological function along approximately 4,000 linear feet of Marsh Creek by widening the channel with a floodplain bench and planting with native vegetation. When complete, the site will include 2 acres of frequently inundated floodplain, 2.9 acres of open stream channel, 4.6 acres of grasslands and native scrub, and 1 acre of paved surface associated with the adjacent creek trail. Duration of 5 months is expected for construction.

V. Project Location

Marsh Creek near intersection of Central Boulevard and Dainty Avenue in Brentwood, California

Start: Latitude: 37°55'50.1" and Longitude: -121°42'38.9"
End: Latitude: 37°56'32.1" and Longitude: -121°42'24.3"

Maps showing the Project location is found in Attachment A of this Order.

VI. Project Impact and Receiving Waters Information

The Project is located within the jurisdiction of the Central Valley Water Board. Receiving waters and groundwater potentially impacted by this Project are protected in accordance with the Water Quality Control Plan for the Sacramento River and San Joaquin River Basins, Fourth Edition, revised April 2016 (Basin Plan). The Basin Plan for the region and other plans and policies may be accessed online at: http://www.waterboards.ca.gov/plans_policies/. The Basin Plan includes water quality standards, which consist of existing and potential beneficial uses of waters of the state, water quality objectives to protect those uses, and the state and federal antidegradation policies.

It is the policy of the State of California that every human being has the right to safe, clean, affordable, and accessible water adequate for human consumption, cooking, and sanitary purposes. This Order promotes that policy by requiring discharges to meet maximum contaminant levels designed to protect human health and ensure that water is safe for domestic use.

Project impact and receiving waters information can be found in Attachment B. Table 1 of Attachment B shows the receiving waters and beneficial uses of waters of the state impacted by the Project. Individual impact location and quantity is shown in Table 2 of Attachment B.

VII. Description of Direct Impacts to Waters of the State

Channel widening activities will occur through the Upper, Middle, and Lower Reaches of Marsh Creek as shown on Figure 2. The Upper Reach is approximately 1,600 feet of the channel between just north of the confluence of Dainty Avenue Bridge and Deer Creek. The Middle Reach, which is about 800 feet in length, will be widened along the west bank. The Lower Reach, which is about 1,600 feet in length, is less constrained and more substantial widening of the channel is planned for this area. The Project will increase the cross-sectional area of the stream channel by excavating 26,000 cubic yards (10,500 from upper, 2,500 from middle, and 13,000 from lower reach) of earth along approximately 4,000 linear feet of both banks of Marsh Creek to create new floodplain.

Upper Reach: Activities conducted at the Upper Reach will include, installing a retaining wall, rough grading and earth moving, and extending Marsh Creek Regional Trail. An approximately 250-foot long retaining wall will be constructed along the west bank. The retaining wall will rise from the back of the floodplain and will not touch the low flow channel. The Marsh Creek Regional Trail currently crosses Central Boulevard at grade. The trail will be extended beneath the Central Boulevard Bridge through placement of approximately 32 cubic yards of wet concrete and 42 cubic yards of base below the high water mark. Approximately 24 cubic yards of riprap will also be installed to protect the footings of the Central Boulevard Bridge. Rough grading and earthmoving activities along the Upper Reach would take place over a period of approximately 2 weeks during the dry season.

Middle Reach: Activities conducted along the Middle Reach will include rough grading and earth moving. These activities will take place over a period of approximately 2 weeks during the dry season.

Lower Reach: Activities conducted along the Lower Reach will include modification of grouted rock, installation of a pedestrian bridge, and rough grading and earth moving. Currently, grouted rock extends to the top of the flood control channel. The upper part, above the high water mark, will be removed during grading as part of widening the new floodplain and replaced with new grouted riprap to match the widened channel. The Project will install a pedestrian bridge across Marsh Creek upstream of the confluence of Sand Creek (Figure 2). The bridge will be 10-feet wide and approximately 100-feet long. Rough grading and earthmoving activities along the Lower Reach would take place over a period of approximately 4 weeks during the dry season.

The Project will install up to six, temporary land bridges across the creek to facilitate construction access between the east side of the creek and the west side of the creek. The bridges will be installed by placing a temporary culvert, which is wrapped in geotextile fabric, in the channel and then placing native soil fill over the culvert. The fabric keeps the fill separated from the creek environment and eases the removal process. Each bridge will use approximately 600 cubic yards of material. The bridges will be in place during the grading operations and at least one will remain in place through planting to connect the staging/disposal site on the west side of Marsh Creek with the rest of the Project.

Dewatering may occur within the Project area. Wet concrete will be placed into stream channel habitat after the area has been completely dewatered or when the work area is naturally dry.

Total Project fill/excavation quantities for all impacts are summarized in Table 2. Permanent impacts are categorized as those resulting in a physical loss in area and also those degrading ecological condition.

Table 2: Total Project Fill/Excavation Quantity

Aquatic Resource Type	Temporary Impact[1]			Permanent Impact					
				Physical Loss of Area			Degradation of Ecological Condition		
	Acres	CY[2]	LF[2]	Acres	CY	LF	Acres	CY	LF
Riparian Zone	2	-	4,000	-	-	-	-	-	-
Stream Channel	2.5	-	4,000	-	-	-	-	-	-

VIII. Description of Indirect Impacts to Waters of the State – Not Applicable

IX. Avoidance and Minimization

According to the Permittee, the following measures will be in place during construction activities to avoid, reduce, and minimize impacts to waters of the state:

1. Impacts will be avoided by restricting the overwhelming majority of grading to an elevation above the ordinary high water mark (OHWM) (root-wad installation and trail underpass will require grading below the OHWM; avoidance of impacts to waters of the State is not feasible). Long term impacts will be minimized by limiting the use of hardened structures

[1] Includes only temporary direct impacts to waters of the state and does not include upland areas of temporary disturbance which could result in a discharge to waters of the state.

[2] Cubic Yards (CY); Linear Feet (LF)

(e.g., grouted riprap) in preference of bio-engineering solutions as much as is practicable. Surface water connections must not be permanently blocked or interrupted and the installation of drop-structures or other features that create barriers to wildlife movement shall be avoided.

2. Prior to construction, the project proponent will secure authorization from the United States Army Corps of Engineers, Regional Water Quality Control Board, and California Department of Fish and Wildlife in conformance to the Clean Water Act and Lake and Streambed Alteration Program.
3. Participation in the East Contra Costa County Habitat Conservation Plan / Natural Community Conservation Plan (HCP/NCCP) is expected to satisfy the requirements of the regulatory agencies for compensatory mitigation for unavoidable impacts on stream channels, wetlands and riparian habitat. A Planning Survey Report will be completed and submitted to the East Contra Costa County Habitat Conservancy. The submittal will include detailed drawings illustrating all temporary and permanent impacts.
4. Per the terms of the adopted HCP/NCCP, a wetland mitigation fee or on-site habitat restoration will mitigate the impacts. If accepted by the regulatory agencies, no additional mitigation for wetland impacts is typically required. HCP/NCCP fee payment will occur at project contract award.
5. For all work within and adjacent to the stream channel and riparian habitat, best management practices (BMPs) will be incorporated into the project design to minimize environmental effects.

X. Compensatory Mitigation

No compensatory mitigation is required for permanent impacts because the restoration project results in a net increase to stream (2.9 acres) and wetland (2.0 acres) habitat.

XI. California Environmental Quality Act (CEQA)

On 3 August 2016, the Contra Costa County, as lead agency, adopted an Initial Study/Mitigated Negative Declaration (IS/MND) (State Clearinghouse (SCH) No. 2016082008) for the Project and filed a Notice of Determination (NOD) at the SCH on 9 January 2017. Pursuant to CEQA, the Central Valley Water Board has made Findings of Facts (Findings) which support the issuance of this Order and are included in Attachment C.

This Order, adopts an initial study/mitigated negative declaration (IS/MND) (State Clearinghouse (SCH) No. 2016082008) and approves the mitigation monitoring and reporting program (MMRP) for the Project. Pursuant to CEQA, the Central Valley Water Board has made Findings of Facts (Findings) which support the issuance of this Order and are included in Attachment C.

XII. Petitions for Reconsideration

Any person aggrieved by this action may petition the State Water Resources Control Board to reconsider this Order in accordance with California Code of Regulations, title 23, section 3867. A petition for reconsideration must be submitted in writing and received within 30 calendar days of the issuance of this Order.

XIII. Fees Received

An application fee deposit of $200.00 was received on 16 December 2016.

The fee amount was determined as required by California Code of Regulations, title 23, sections 3833(b)(3) and 2200(a)(3), and was calculated as category D - Ecological Restoration and Enhancement Projects (fee code 85) with the dredge and fill fee calculator.

XIV. Conditions

The Central Valley Water Board has independently reviewed the record of the Project to analyze impacts to water quality and designated beneficial uses within the watershed of the Project. In accordance with this Order, the Permittee may proceed with the Project under the following terms and conditions:

A. Authorization

Impacts to waters of the state shall not exceed quantities shown in Table 2.

B. Reporting and Notification Requirements

The following section details the reporting and notification types and timing of submittals. Requirements for the content of these reporting and notification types are detailed in Attachment D, including specifications for photo and map documentation during the Project. Written reports and notifications must be submitted using the Reporting and Notification Cover Sheet located in Attachment D, which must be signed by the Permittee or an authorized representative.

The Permittee must submit all notifications, submissions, materials, data, correspondence, and reports in a searchable Portable Document Format (PDF). Documents less than 50 MB must be emailed to: centralvalleysacramento@waterboards.ca.gov. In the subject line of the email, include the Central Valley Water Board Contact, Project name, and WDID. Documents that are 50 MB or larger must be transferred to a disk and mailed to the Central Valley Water Board Contact.

1. Project Reporting

a. **Monthly Reporting:** The Permittee must submit a Monthly Report to the Central Valley Water Board on the 1st day of each month beginning the month after the submittal of the Commencement of Construction Notification. Monthly reporting shall continue until the Central Valley Water Board issues a Notice of Project Complete Letter to the Permittee.

   If no sampling is required, the Permittee shall submit a written statement stating, “No sampling was required” within two weeks of initiation of in-water construction, and every month thereafter.

b. **Annual Reporting – Not Applicable**

2. Project Status Notifications

a. **Commencement of Construction:** The Permittee shall submit a Commencement of Construction Report at least seven (7) days prior to start of initial ground disturbance activities which includes the corresponding Waste Discharge Identification Number (WDID#) issued under the NPDES General Permit for Storm Water Discharges Associated with Construction and Land Disturbance Activities (Order No. 2009-0009-DWQ; NPDES No. CAS000002).

b. **Request for Notice of Completion of Discharges Letter:** The Permittee shall submit a Request for Notice of Completion of Discharges Letter following completion of active Project construction activities, including any required restoration and permittee-responsible mitigation. This request shall be submitted to the Central Valley Water Board staff within thirty (30) days following completion of all Project construction activities. Upon acceptance of the request, Central Valley Water Board staff shall issue a Notice of Completion of Discharges Letter to the Permittee which will end the active discharge period and associated annual fees.

c. **Request for Notice of Project Complete Letter:** The Permittee shall submit a Request for Notice of Project Complete Letter when construction and/or any post-construction monitoring is complete,[3] and no further Project activities will occur. This request shall be submitted to Central Valley Water Board staff within thirty (30) days following completion of all Project activities. Upon approval of the request, the Central Valley Water Board staff shall issue a Notice of Project Complete Letter to the Permittee which will end the post discharge monitoring period and associated annual fees.

3. **Conditional Notifications and Reports:** The following notifications and reports are required as appropriate.

a. **Accidental Discharges of Hazardous Materials**[4]

Following an accidental discharge of a reportable quantity of a hazardous material, sewage, or an unknown material, the following applies (Wat. Code, § 13271):

i. As soon as (A) Permittee has knowledge of the discharge or noncompliance, (B) notification is possible, and (C) notification can be provided without substantially impeding cleanup or other emergency measures then:

- first call – 911 (to notify local response agency)
- then call – Office of Emergency Services (OES) State Warning Center at:(800) 852-7550 or (916) 845-8911
- Lastly follow the required OES procedures as set forth in: http://www.caloes.ca.gov/FireRescueSite/Documents/CalOES-Spill_Booklet_Feb2014_FINAL_BW_Acc.pdf

ii. Following notification to OES, the Permittee shall notify Central Valley Water Board, as soon as practicable (ideally within 24 hours). Notification may be delivered via written notice, email, or other verifiable means in accordance with section XIV.B.

[3] Completion of post-construction monitoring shall be determined by Central Valley Water Board staff and shall be contingent on successful attainment of restoration and mitigation performance criteria.

[4] "Hazardous material" means any material that, because of its quantity, concentration, or physical or chemical characteristics, poses a significant present or potential hazard to human health and safety or to the environment if released into the workplace or the environment. "Hazardous materials" include, but are not limited to, hazardous substances, hazardous waste, and any material that a handler or the administering agency has a reasonable basis for believing that it would be injurious to the health and safety of persons or harmful to the environment if released into the workplace or the environment. (Health & Saf. Code, § 25501.)

iii. Within five (5) working days of notification to the Central Valley Water Board, the Permittee must submit an Accidental Discharge of Hazardous Material Report.

b. **Violation of Compliance with Water Quality Standards:** The Permittee shall notify the Central Valley Water Board of any event causing a violation of compliance with water quality standards. Notification may be delivered via written notice, email, or other verifiable means in accordance with section XIV.B.

i. This notification must be followed within three (3) working days by submission of a Violation of Compliance with Water Quality Standards Report.

c. **In-Water Work and Diversions**

i. The Permittee shall notify the Central Valley Water Board at least forty-eight (48) hours prior to initiating work in water or stream diversions. Notification may be delivered via written notice, email, or other verifiable means in accordance with section XIV.B.

ii. Within three (3) working days following completion of work in water or stream diversions, an In-Water Work/Diversions Water Quality Monitoring Report must be submitted to Central Valley Water Board staff.

d. **Modifications to Project**

Project modifications may require an amendment of this Order. The Permittee shall give advance notice to Central Valley Water Board staff if Project implementation as described in the application materials is altered in any way or by the imposition of subsequent permit conditions by any local, state or federal regulatory authority by submitting a Modifications to Project Report. The Permittee shall inform Central Valley Water Board staff of any Project modifications that will interfere with the Permittee's compliance with this Order. Notification may be made in accordance with conditions in the certification deviation section of this Order.

e. **Transfer of Property Ownership:** This Order is not transferable in its entirety or in part to any person or organization except after notice to the Central Valley Water Board in accordance with the following terms:

i. The Permittee must notify the Central Valley Water Board of any change in ownership or interest in ownership of the Project area by submitting a Transfer of Property Ownership Report. The Permittee and purchaser must sign and date the notification and provide such notification to the Central Valley Water Board at least 10 days prior to the transfer of ownership. The purchaser must also submit a written request to the Central Valley Water Board to be named as the permittee in a revised order.

ii. Until such time as this Order has been modified to name the purchaser as the permittee, the Permittee shall continue to be responsible for all requirements set forth in this Order.

f. **Transfer of Long-Term BMP Maintenance:** If maintenance responsibility for post-construction BMPs is legally transferred, the Permittee must submit to the Central Valley Water Board a copy of such documentation and must provide the transferee with a copy of a long-term BMP maintenance plan that complies with manufacturer or designer specifications. The Permittee must provide such notification to the Central Valley Water Board with a Transfer of Long-Term BMP

Maintenance Report at least 10 days prior to the transfer of BMP maintenance responsibility.

C. Water Quality Monitoring

1. **General:** Continuous visual surface water monitoring shall be conducted during active construction periods to detect accidental discharge of construction related pollutants (e.g. oil and grease, turbidity plume, or uncured concrete). The Permittee shall perform surface water sampling:

   a. when performing any in-water work;

   b. during the entire duration of temporary surface water diversions;

   c. in the event that the Project activities result in any materials reaching surface waters; or

   d. when any activities result in the creation of a visible plume in surface waters.

2. **Accidental Discharges/Noncompliance:** Upon occurrence of an accidental discharge of hazardous materials or a violation of compliance with a water quality standard, Central Valley Water Board staff may require water quality monitoring based on the discharge constituents and/or related water quality objectives and beneficial uses.

3. **In-Water Work or Diversions:**

   During planned in-water work or during the entire duration of temporary water diversions, any discharge(s) to waters of the state shall conform to the following water quality standards:

   a. Waters shall not contain oils, greases, waxes, or other materials in concentrations that cause nuisance, result in a visible film or coating on the surface of the water or on objects in the water, or otherwise adversely affect beneficial uses.

   b. The pH shall not be depressed below 6.5 nor raised above 8.5.

   c. Activities shall not cause turbidity increases in surface water to exceed:

   I. where natural turbidity is less than 1 Nephelometric Turbidity Units (NTUs), controllable factors shall not cause downstream turbidity to exceed 2 NTU;

   II. where natural turbidity is between 1 and 5 NTUs, increases shall not exceed 1 NTU;

   III. where natural turbidity is between 5 and 50 NTUs, increases shall not exceed 20 percent;

   IV. where natural turbidity is between 50 and 100 NTUs, increases shall not exceed 10 NTUs;

   V. where natural turbidity is greater than 100 NTUs, increases shall not exceed 10 percent.

   In determining compliance with the above limits, appropriate averaging periods may be applied provided that beneficial uses will be fully protected. Averaging periods may only be used with prior permission of the Central Valley Water Board Executive Officer.

Sampling during in-water work or during the entire duration of temporary water diversions shall be conducted in accordance with Table 3 sampling parameters.[5] The sampling requirements in Table 3 shall be conducted upstream out of the influence of the Project, and approximately 300 feet downstream of the work area.

The sampling frequency may be modified for certain projects with written approval from Central Valley Water Board staff. An In-Water Work and Diversions Water Quality Monitoring Report, as described in Attachment D, shall be submitted within two weeks on initiation of in-water construction, and with every monthly report thereafter. In reporting the data, the Permittee shall arrange the data in tabular form so that the sampling locations, date, constituents, and concentrations are readily discernible. The data shall be summarized in such a manner to illustrate clearly whether the Project complies with Order requirements. The report shall include surface water sampling results, visual observations, and identification of the turbidity increase in the receiving water applicable to the natural turbidity conditions specified in the turbidity criteria in XIV.C.3.c.

Table 3: Sample Type and Frequency Requirements

Parameter	Unit of Measurement	Type of Sample	Minimum Frequency
Oil and Grease	N/A	Visual	Continuous
pH[6]	Standard Units	Grab	Every 4 hours
Turbidity	NTU	Grab	Every 4 hours

4. Post-Construction:

a. Visually inspect the Project site during the rainy season for one year to ensure erosion, stream instability, or other water quality pollution is not occurring in or downstream of the Project site.

b. **A minimum of three (3) storm-sampling events for turbidity shall be conducted in the water year[7] following construction completion. The storm-sampling event shall occur during the first rain event and any other rain event of the water year forecasted for at least 0.10-inch in a twenty-four (24) hour period that is preceded by at least 30 days of dry weather.** The sampling shall be conducted upstream out of the influence of the Project, and approximately 300 feet downstream of the Project. **If water samples indicate that water quality standards for turbidity are exceeded, the Permittee shall notify the Central Valley Water Board in accordance with section XIV.B.3.b. If any erosion controls are found to be inadequate, further erosion controls shall be implemented and an additional three (3) storm-sampling events shall be conducted the following water year. Additional permits may be required to carry out any necessary site remediation.**

[5] Pollutants shall be analyzed using the analytical methods described in 40 Code of Federal Regulations Part 136; where no methods are specified for a given pollutant, the method shall be approved by Central Valley Water Board staff. Grab samples shall be taken between the surface and mid-depth and not be collected at the same time each day to get a complete representation of variations in the receiving water. A hand-held field meter may be used, provided the meter utilizes a U.S. EPA-approved algorithm/method and is calibrated and maintained in accordance with the manufacturer's instructions. A calibration and maintenance log for each meter used for monitoring shall be maintained onsite.

[6] Sampling to be conducted if uncured concrete comes into contact with surface water.

[7] Water year is defined as the 12-month period starting 1 October through 30 September.

D. Standard

1. This Order is subject to modification or revocation upon administrative or judicial review, including review and amendment pursuant to Water Code section 13330, and California Code of Regulations, title 23, chapter 28, Article 6 commencing with Choose an item. Additionally, the Central Valley Water Board reserves the right to suspend, cancel, or modify and reissue this Order, after providing notice to the Permittee, if the Central Valley Water Board determines that: the Project fails to comply with any of the conditions of this Order; or, when necessary to implement any new or revised water quality standards and implementation plans adopted or approved pursuant to the Porter-Cologne Water Quality Control Act (Wat. Code, § 13000 et seq.) or federal Clean Water Act section 303 (33 U.S.C. § 1313). For purposes of Clean Water Act section 401(d), the condition constitutes a limitation necessary to assure compliance with water quality standards and appropriate requirements of state law.

2. This Order is not intended and shall not be construed to apply to any activity involving a hydroelectric facility requiring a Federal Energy Regulatory Commission (FERC) license or an amendment to a FERC license, unless the pertinent certification application was filed pursuant to subsection 3855(b) of chapter 28, title 23 of the California Code of Regulations, and that application specifically identified that a FERC license or amendment to a FERC license for a hydroelectric facility was being sought.

3. This Order is conditioned upon total payment of any fee required under title 23 of the California Code of Regulations and owed by the Permittee.

4. In the event of any violation or threatened violation of the conditions of this Order, the violation or threatened violation shall be subject to any remedies, penalties, process, or sanctions as provided for under state and federal law. For purposes of Clean Water Act, section 401(d), the applicability of any state law authorizing remedies, penalties, processes, or sanctions for the violation or threatened violation constitutes a limitation necessary to assure compliance with the water quality standards and other pertinent requirements incorporated into this Order.

E. General Compliance

1. Failure to comply with any condition of this Order shall constitute a violation of the Porter-Cologne Water Quality Control Act and the Clean Water Act. The Permittee and/or discharger may then be subject to administrative and/or civil liability pursuant to Water Code section 13385.

2. Permitted actions must not cause a violation of any applicable water quality standards, including impairment of designated beneficial uses for receiving waters as adopted in the Basin Plans by any applicable Central Valley Water Board or any applicable State Water Board (collectively Water Boards) water quality control plan or policy. The source of any such discharge must be eliminated as soon as practicable.

3. In response to a suspected violation of any condition of this Order, the Central Valley Water Board may require the holder of this Order to furnish, under penalty of perjury, any technical or monitoring reports the Water Boards deem appropriate, provided that the burden, including costs, of the reports shall bear a reasonable relationship to the need for the reports and the benefits to be obtained from the reports. The additional monitoring requirements ensure that permitted discharges and activities comport with any applicable effluent limitations, water quality standards, and/or other appropriate requirement of state law.

4. The Permittee must, at all times, fully comply with engineering plans, specifications, and technical reports submitted to support this Order; and all subsequent submittals required as part of this Order. The conditions within this Order and Attachments supersede conflicting provisions within Permittee submittals.
5. This Order and all of its conditions contained herein continue to have full force and effect regardless of the expiration or revocation of any federal license or permit issued for the Project. For purposes of Clean Water Act, section 401(d), this condition constitutes a limitation necessary to assure compliance with the water quality standards and other pertinent requirements of state law.
6. The Permittee shall adhere to all requirements in the mitigation monitoring and reporting program (MMRP) (include title and date of MMRP) which is incorporated herein by reference and any additional measures as outlined in Attachment C, CEQA Findings of Fact.
7. **Construction General Permit Requirement.** The Permittee shall obtain coverage under the National Pollutant Discharge Elimination System (NPDES) General Permit for Storm Water Discharges Associated with Construction and Land Disturbance Activities Order No. 2009-0009-DWQ, as amended, for discharges to surface waters comprised of storm water associated with construction activity, including, but not limited to, demolition, clearing, grading, excavation, and other land disturbance activities of one or more acres, or where projects disturb less than one acre but are part of a larger common plan of development that in total disturbs one or more acres.

F. Administrative

1. Signatory requirements for all document submittals required by this Order are presented in Attachment E of this Order.
2. This Order does not authorize any act which results in the taking of a threatened, endangered or candidate species or any act, which is now prohibited, or becomes prohibited in the future, under either the California Endangered Species Act (Fish & G. Code, §§ 2050-2097) or the federal Endangered Species Act (16 U.S.C. §§ 1531-1544). If a “take” will result from any act authorized under this Order held by the Permittee, the Permittee must obtain authorization for the take prior to any construction or operation of the portion of the Project that may result in a take. The Permittee is responsible for meeting all requirements of the applicable endangered species act for the Project authorized under this Order.
3. The Permittee shall grant Central Valley Water Board staff, or an authorized representative (including an authorized contractor acting as a Water Board representative), upon presentation of credentials and other documents as may be required by law, permission to:
   - **a.** Enter upon the Project or compensatory mitigation site(s) premises where a regulated facility or activity is located or conducted, or where records are kept.
   - **b.** Have access to and copy any records that are kept and are relevant to the Project or the requirements of this Order.
   - **c.** Inspect any facilities, equipment (including monitoring and control equipment), practices, or operations regulated or required under this Order.
   - **d.** Sample or monitor for the purposes of assuring Order compliance.

4. A copy of this Order shall be provided to any consultants, contractors, and subcontractors working on the Project. Copies of this Order shall remain at the Project site for the duration of this Order. The Permittee shall be responsible for work conducted by its consultants, contractors, and any subcontractors.
5. A copy of this Order must be available at the Project site(s) during construction for review by site personnel and agencies. All personnel performing work on the Project shall be familiar with the content of this Order and its posted location at the Project site.

G. Construction

1. Dewatering

a. The Permittee shall develop and maintain on-site a Surface Water Diversion and/or Dewatering Plan(s). The Plan(s) must be developed prior to initiation of any water diversions. The Plan(s) shall include the proposed method and duration of diversion activities and include water quality monitoring conducted, as described in section XIV.C.3, during the entire duration of dewatering and diversion activities. The Plan(s) must be consistent with this Order and must be made available to the Central Valley Water Board staff upon request.

b. For any temporary dam or other artificial obstruction being constructed, maintained, or placed in operation, sufficient water shall at all times be allowed to pass downstream, to maintain beneficial uses of waters of the state below the dam. Construction, dewatering, and removal of temporary cofferdams shall not violate section XIV.C.3.

c. The temporary dam or other artificial obstruction shall only be built from clean materials, including, but not limited to, sandbags, gravel bags, water dams, or clean/washed gravel which will cause little or no siltation. Stream flow shall be temporarily diverted using gravity flow through temporary culverts/pipes or pumped around the work site with the use of hoses.

d. If water is present in the work area, the area must be dewatered prior to start of work.

e. This Order does not allow permanent water diversion of flow from the receiving water. This Order is invalid if any water is permanently diverted as a part of the project.

2. Directional Drilling – NOT APPLICABLE

3. Dredging – NOT APPLICABLE

4. Fugitive Dust – NOT APPLICABLE

5. Good Site Management "Housekeeping"

a. The Permittee shall develop and maintain onsite a project-specific Spill Prevention, Containment and Cleanup Plan outlining the practices to prevent, minimize, and/or clean up potential spills during construction of the Project. The Plan must detail the Project elements, construction equipment types and location, access and staging and construction sequence. The Plan must be made available to the Central Valley Water Board staff upon request.

b. Refueling of equipment within the floodplain or within 300 feet of the waterway is prohibited. If critical equipment must be refueled within 300 feet of the waterway, spill prevention and countermeasures must be implemented to avoid spills. Refueling areas shall be provided with secondary containment including drip pans and/or placement of absorbent material. No hazardous materials, pesticides, fuels, lubricants, oils, hydraulic fluids, or other construction-related potentially hazardous substances should be stored within a floodplain or within 300 feet of a waterway. The Permittee must perform frequent inspections of construction equipment prior to utilizing it near surface waters to ensure leaks from the equipment are not occurring and are not a threat to water quality.

c. All materials resulting from the Project shall be removed from the site and disposed of properly.

6. Hazardous Materials

a. The discharge of petroleum products, any construction materials, hazardous materials, pesticides, fuels, lubricants, oils, hydraulic fluids, raw cement, concrete or the washing thereof, asphalt, paint, coating material, drilling fluids, or other substances potentially hazardous to fish and wildlife resulting from or disturbed by project-related activities is prohibited and shall be prevented from contaminating the soil and/or entering waters of the state. In the event of a prohibited discharge, the Permittee shall comply with notification requirements in sections XIV.B.3.a and XIV.B.3.b.

b. Concrete must be completely cured before coming into contact with waters of the United States and waters of the state. Surface water that contacts wet concrete must be pumped out and disposed of at an appropriate off-site commercial facility, which is authorized to accept concrete wastes.

7. Invasive Species and Soil Borne Pathogens – NOT APPLICABLE

8. In-Water Work

a. Work in the streambed and riparian zone shall occur during periods of no precipitation and no flow or when the work area has been completely dewatered.

9. Post-Construction Storm Water Management – NOT APPLICABLE

10. Roads – NOT APPLICABLE

11. Sediment Control

a. Except for activities permitted by the United States Army Corps of Engineers under Section 404 of the Clean Water Act and/or Section 10 of the Rivers and Harbors Act, soil, silt, or other organic materials shall not be placed where such materials could pass into surface water or surface water drainage courses.

b. Silt fencing, straw wattles, or other effective management practices must be used along the construction zone to minimize soil or sediment along the embankments from migrating into the waters of the state through the entire duration of the Project.

c. The use of netting material (e.g., monofilament-based erosion blankets) that could trap aquatic dependent wildlife is prohibited within the Project area.

12. Special Status Species – NOT APPLICABLE

13. Stabilization/Erosion Control

a. All areas disturbed by Project activities shall be protected from washout and erosion.

b. Hydroseeding shall be performed with California native seed mix.

14. Storm Water

a. During the construction phase, the Permittee must employ strategies to minimize erosion and the introduction of pollutants into storm water runoff. These strategies must include the following:

i. The Permittee must comply with the Statewide Construction Storm Water Permit, including, but not limited to, preparation and implementation of a Storm Water Pollution Prevention Plan; and

ii. An effective combination of erosion and sediment control Best Management Practices (BMPs) must be implemented and adequately working prior to the rainy season and during all phases of construction.

H. Site Specific

Marsh Creek is included on the Clean Water Act Section 303(d) list of impaired waters for mercury and is subject to the Sacramento – San Joaquin Delta Methylmercury Total Maximum Daily Load (TMDL).

1. During construction, the Permittee shall implement erosion and sediment control measures to minimize releases of mercury and methylmercury, with the goal of minimizing mercury-containing sediment erosion to protect beneficial uses and reduce mercury loads migrating downstream and to the Delta.

2. The Permittee shall implement erosion and sediment control measures and conduct monitoring ensuring compliance with the turbidity water quality standard as required in Table 3. If turbidity levels exceed the water quality standard, work shall stop and additional erosion management practices implemented.

3. Whenever practicable, the Permittee shall maximize removal of mercury-enriched sediment from the floodplain. Sediment removed from the channel shall be placed so that it will not be allowed to erode back into the creek. The Permittee may relocate sediment within the channel if the sediment is to enhance habitat and appropriate erosion controls are provided, such as revegetation.

I. Total Maximum Daily Load (TMDL) – NOT APPLICABLE

J. Mitigation for Temporary Impacts

The Permittee shall restore all areas of temporary impacts, including Project site upland areas, which could result in a discharge to waters of the state to pre-construction contours and conditions upon completion of construction activities.

K. Compensatory Mitigation for Permanent Impacts[8]

[8] Compensatory Mitigation is for permanent physical loss and permanent ecological degradation of a water of the state.

No compensatory mitigation was required for permanent impacts because the restoration project results in a net increase to stream (2.9 acres) and wetland (2.0 acres) habitat.

L. Ecological Restoration and Enhancement

The quantity of waters of the state permanently gained by the Project is shown in Table 4.

Table 4: Total Ecological Restoration and Enhancement Quantity

Aquatic Resource Type	Restoration Type	Units	Method[9]				
			Est.	Re-est.	Reh.	Enh.	Pres.
Stream Channel	PR	Acres	-	2.9	-	-	-
Wetland	PR	Acres	-	2.0	-	-	-

M. Certification Deviation

1. Minor modifications of Project locations or predicted impacts may be necessary as a result of unforeseen field conditions, necessary engineering re-design, construction concerns, or similar reasons. Some of these prospective Project modifications may have impacts on water quality. Some modifications of Project locations or predicted impacts may qualify as Certification Deviations as set forth in Attachment F. For purposes of this Certification, a “Certification Deviation” is a Project locational or impact modification that does not require an immediate amendment of the Order, because the Central Valley Water Board has determined that any potential water quality impacts that may result from the change are sufficiently addressed by the Order conditions and the CEQA Findings. After the termination of construction, this Order will be formally amended to reflect all authorized Certification Deviations and any resulting adjustments to the amount of water resource impacts and required compensatory mitigation amounts.
2. A Project modification shall not be granted a Certification Deviation if it warrants or necessitates changes that are not addressed by the Order conditions or the CEQA environmental document such that the Project impacts are not addressed in the Project's environmental document or the conditions of this Order. In this case a supplemental environmental review and different Order will be required.

[9] Methods: establishment (Est.), reestablishment (Re-est.), rehabilitation (Reh.), enhancement (Enh.), preservation (Pres.).

XV. Water Quality Certification

I hereby issue the Order for the Three Creeks Parkway Restoration Project, (WDID#5B07CR00187) certifying that as long as all of the conditions listed in this Order are met, any discharge from the referenced Project will comply with the applicable provisions of Clean Water Act sections 301 (Effluent Limitations), 302 (Water Quality Related Effluent Limitations), 303 (Water Quality Standards and Implementation Plans), 306 (National Standards of Performance), and 307 (Toxic and Pretreatment Effluent Standards). The Central Valley Water Board, as lead agency, hereby adopts an initial study/mitigated negative declaration (IS/MND) (State Clearinghouse (SCH) No. 2016082008) and approves the mitigation monitoring and reporting program (MMRP) for the Project.

This discharge is also regulated pursuant to State Water Board Water Quality Order No. 2003-0017-DWQ which authorizes this Order to serve as Waste Discharge Requirements pursuant to the Porter-Cologne Water Quality Control Act (Wat. Code, § 13000 et seq.).

Except insofar as may be modified by any preceding conditions, all Order actions are contingent on: (a) the discharge being limited and all proposed mitigation being completed in strict compliance with the conditions of this Order and the attachments to this Order; and, (b) compliance with all applicable requirements of Statewide Water Quality Control Plans and Policies, the Regional Water Boards' Water Quality Control Plans and Policies.

Original Signed By Adam Laputz for:

Pamela C. Creedon Executive Officer Central Valley Regional Water Quality Control Board	16 March 2018 Date

Attachment A	Project Map
Attachment B	Receiving Waters, Impact, and Mitigation Information
Attachment C	CEQA Findings of Facts
Attachment D	Report and Notification Requirements
Attachment E	Signatory Requirements
Attachment F	Certification Deviation Procedures

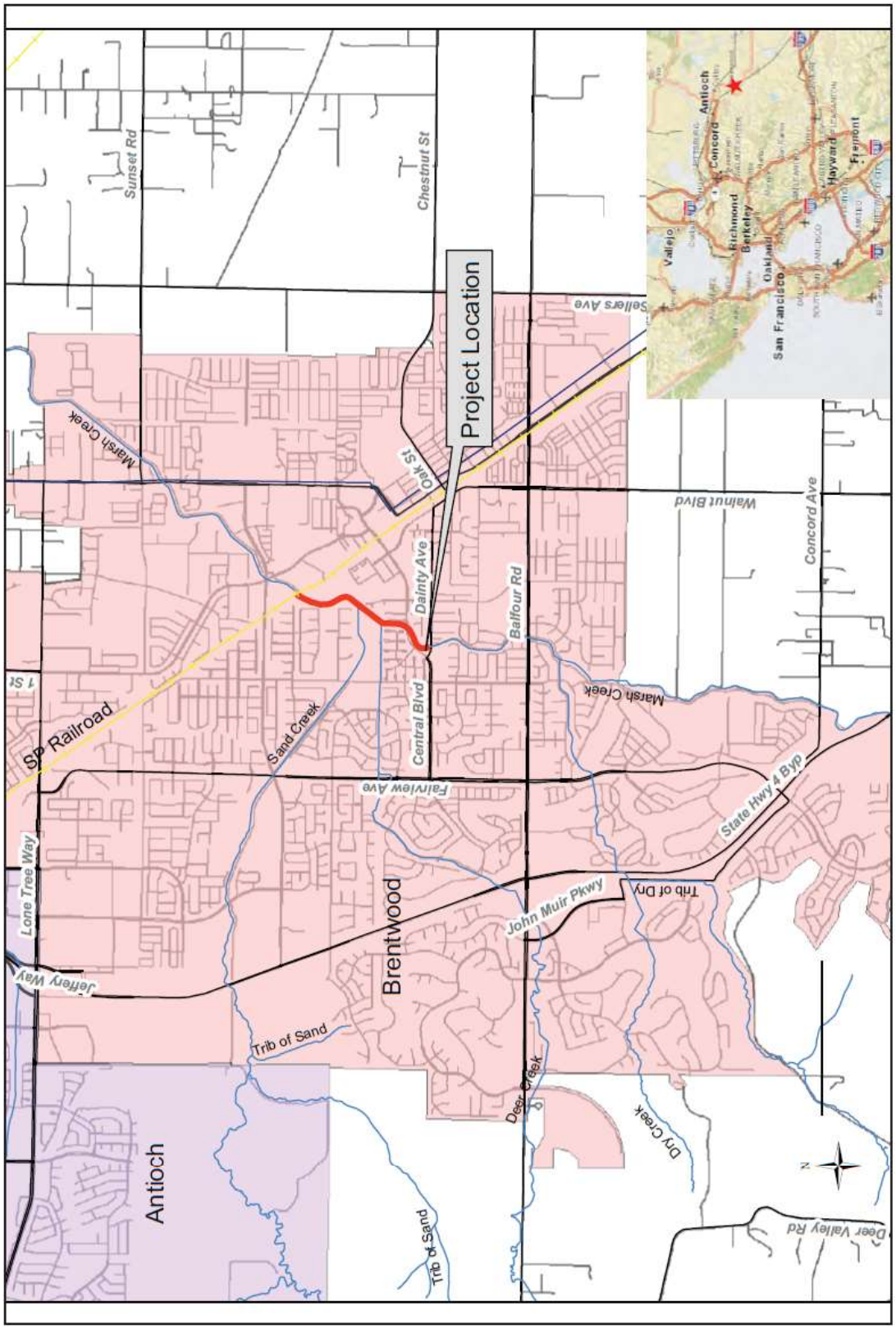

Figure 1: Project Location Map

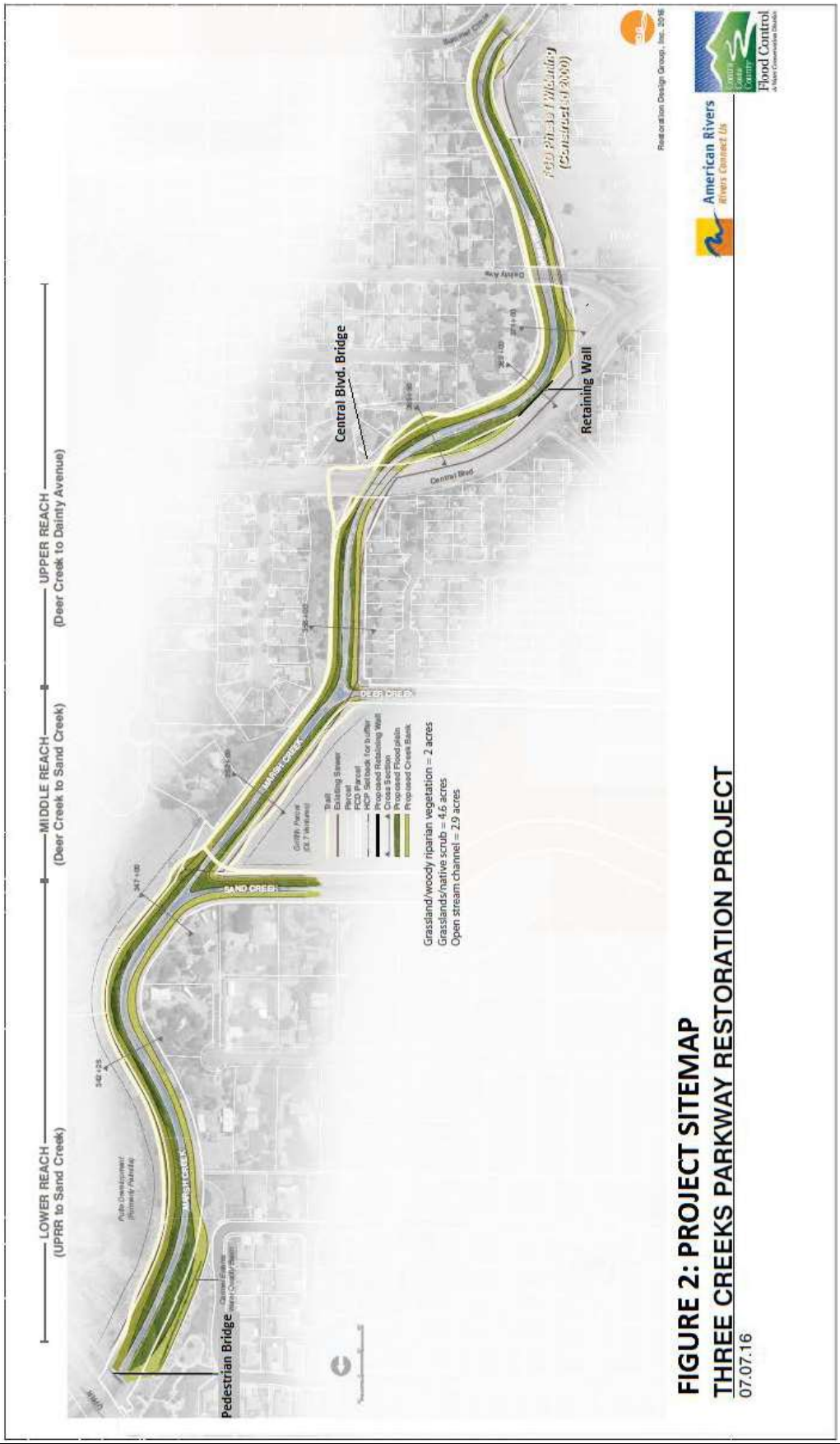

FIGURE 2: PROJECT SITEMAP

THREE CREEKS PARKWAY RESTORATION PROJECT

07.07.16

Receiving Waters

The following table shows the receiving waters associated with each impact site.

Table 1: Receiving Water(s) Information

Non-Federal Waters	Impact Site ID	Waterbody Name	Impacted Aquatic Resource Type	Water Board Hydrologic Units	Receiving Waters	Receiving Waters Beneficial Uses	303d Listing Pollutant	eCRAM ID[10]
☐	Site 01	*Marsh Creek*	*Stream*	*544.00*	*Marsh Creek*	*MUN, AGR, PROC, IND, REC-1, REC-2, WARM, COLD, MIGR, SPWN, WILD, NAV*	*Diazinon, E. coli, Mercury, Sediment toxicity, Unknown toxicity*	*N/A*
☐	Site 02		*Riparian Zone (below OHWM)*					

Individual Direct Impact Locations

The following table shows individual impact locations.

Table 2: Individual Direct Impact Information

Site ID	Latitude	Longitude	Indirect Impact Requiring Mitigation		Direct Impact Duration	Dredge			Fill/Excavation		
			Yes	No		Acres	Cubic Yards	Linear Feet	Acres	Cubic Yards	Linear Feet
1. Site 01	37°55'50.1"	-121°42'38.9"	☐	☒	Temporary	-	-	-	2.5	-	4,000
					Permanent	-	-	-	-	-	-
2. Site 02	37°55'50.1"	-121°42'38.9"	☐	☒	Temporary	-	-	-	2.0	-	4,000
					Permanent	-	-	-	-	-	-

[10] California Rapid Assessment Method (CRAM) score of impacted sites provided by the Permittee.

A. Environmental Review

On 3 August 2016, the Contra Costa County, as lead agency, adopted an Initial Study/Mitigated Negative Declaration (IS/MND) (State Clearinghouse (SCH) No. 2016082008) for the Project and filed a Notice of Determination (NOD) at the SCH on 9 January 2017. The Central Valley Water Board is a responsible agency under CEQA (Pub. Resources Code, § 21069) and in making its determinations and findings, must presume that Contra Costa County's adopted environmental document complies with the requirements of CEQA and is valid. (Pub. Resources Code, § 21167.3.) The Central Valley Water Board has reviewed and considered the environmental document and finds that the environmental document prepared by Contra Costa County addresses the Project's water quality impacts. (Cal. Code Regs., tit. 14, § 15096, subd. (f).) The environmental document includes the mitigation monitoring and reporting program (MMRP) developed by Contra Costa County for all mitigation measures that have been adopted for the Project to reduce potential significant impacts. (Pub. Resources Code, § 21081.6, subd. (a)(1); Cal. Code Regs., tit. 14, § 15074, subd. (d).)

B. Incorporation by Reference

Pursuant to CEQA, these Findings of Facts (Findings) support the issuance of this Order based on the Project IS/MND, the application for this Order, and other supplemental documentation.

All CEQA project impacts, including those discussed in subsection C below, are analyzed in detail in the Project Final IS/MND which is incorporated herein by reference. The Project IS/MND is available at: 255 Glacier Drive, Martinez, California 94553.
Requirements under the purview of the Central Valley Water Board in the MMRP are incorporated herein by reference.

The Permittee's application for this Order, including all supplemental information provided, is incorporated herein by reference.

C. Findings

The IS/MND describes the potential significant environmental effects to water quality that were mitigated in the IS/MND. Having considered the whole of the record, including comments received during the public review process, the Central Valley Water Board makes the following findings:

(1) Revisions in the project plans or proposals made by, or agreed to by the applicant before a proposed mitigated negative declaration and initial study are released for public review would avoid the effects or mitigate the effects to a point where clearly no significant effects would occur, and

(2) There is no substantial evidence, in light of the whole record before the agency, that the project as revised may have a significant effect on the environment. (Cal. Code Regs., tit. 14, § 15070.)

<u>a.i. Potential Significant Impact:</u> Potential for increased erosion, sedimentation, and discharge of polluted runoff from the project site. Potential to decrease creek flow velocities and erosion potential while improving water quality.

a.ii. Facts in Support of Finding: Enrollment in NPDES program and development and implementation of a SWPPP would ensure construction activities do not exceed Central Valley Water Board water quality standards; The project would reduce the potential for erosion and sediment transport by lowering the water stage, reducing the velocity by widening the cross-sectional velocity of the channel, and establishing native riparian vegetation where compatible with the flood management objectives; The planting of vegetation such as trees along the widened creek channel would provide shade for surface waters, thereby decreasing water temperatures and increasing the currently low dissolved oxygen levels; **BIO-4:** Impacts on waters of the U.S. will be avoided by restricting grading to an elevation above the OHWM; avoidance of impacts to waters of the State is not feasible. Long-term impacts shall be minimized by limiting the use of hardened structures (e.g., grouted riprap) in preference of bioengineering solutions as much as is practicable. Surface water connections must not be permanently blocked or interrupted and the installation of drop-structures or other features that create barriers to wildlife movement shall be avoided.

For all work within and adjacent to the stream channel and riparian habitat, best management practices (BMPs) must be incorporated into the project design to minimize environmental effects.

D. Determination

The Central Valley Water Board has determined that the Project, when implemented in accordance with the MMRP and the conditions in this Order, will not result in any significant adverse water quality impacts. (Cal. Code Regs., tit. 14, § 15096, subd (h).) The Central Valley Water Board will file a NOD with the SCH within five (5) working days from the issuance of this Order. (Cal. Code Regs., tit. 14, § 15096, subd. (i).)

Copies of this Form

In order to identify your project, it is necessary to include a copy of the Project specific Cover Sheet below with your report: please retain for your records. If you need to obtain a copy of the Cover Sheet you may download a copy of this Order as follows:

1. Go to: http://www.waterboards.ca.gov/water_issues/programs/cwa401/certifications.shtml

2. Find your Order in the table based on Applicant, Date, and Subject headers.

Report Submittal Instructions

1. Check the box on the Report and Notification Cover Sheet next to the report or notification you are submitting.

- **Part A (Annual Report):** This report will be submitted annually from the anniversary of Project effective date until a Notice of Project Complete Letter is issued.
- **Part B (Project Status Notifications):** Used to notify the Central Valley Water Board of the status of the Project schedule that may affect Project billing.
- **Part C (Conditional Notifications and Reports):** Required on a case by case basis for accidental discharges of hazardous materials, violation of compliance with water quality standards, notification of in-water work, or other reports.

2. Sign the Report and Notification Cover Sheet and attach all information requested for the Report Type.

3. Electronic Report Submittal Instructions:

- Submit signed Report and Notification Cover Sheet and required information via email to: centralvalleysacramento@waterboards.ca.gov and cc: Nicholas.White@waterboards.ca.gov
- Include in the subject line of the email:
  Subject: ATTN: Nicholas White; Reg. Measure ID: 416152_Report

Definition of Reporting Terms

1. **Active Discharge Period:** The active discharge period begins with the effective date of this Order and ends on the date that the Permittee receives a Notice of Completion of Discharges Letter or, if no post-construction monitoring is required, a Notice of Project Complete Letter. The Active Discharge Period includes all elements of the Project including site construction and restoration, and any Permittee responsible compensatory mitigation construction.

2. **Request for Notice of Completion of Discharges Letter:** This request by the Permittee to the Central Valley Water Board staff pertains to projects that have post construction monitoring requirements, e.g. if site restoration was required to be monitored for 5 years following construction. Central Valley Water Board staff will review the request and send a Completion of Discharges Letter to

the Permittee upon approval. This letter will initiate the post-discharge monitoring period and a change in fees from the annual active discharge fee to the annual post-discharge monitoring fee.

3. **Request for Notice of Project Complete Letter:** This request by the Permittee to the Central Valley Water Board staff pertains to projects that either have completed post-construction monitoring and achieved performance standards or have no post-construction monitoring requirements, and no further Project activities are planned. Central Valley Water Board staff will review the request and send a Project Complete Letter to the Permittee upon approval. Termination of annual invoicing of fees will correspond with the date of this letter.

4. **Post-Discharge Monitoring Period:** The post-discharge monitoring period begins on the date of the Notice of Completion of Discharges Letter and ends on the date of the Notice of Project Complete Letter issued by the Central Valley Water Board staff. The Post-Discharge Monitoring Period includes continued water quality monitoring or compensatory mitigation monitoring.

5. **Effective Date:** 16 March 2018.

Map/Photo Documentation Information

When submitting maps or photos, please use the following formats.

1. **Map Format Information:**
   Preferred map formats of at least 1:24000 (1" = 2000') detail (listed in order of preference):
   - **GIS shapefiles**: The shapefiles must depict the boundaries of all project areas and extent of aquatic resources impacted. Each shape should be attributed with the extent/type of aquatic resources impacted. Features and boundaries should be accurate to within 33 feet (10 meters). Identify datum/projection used and if possible, provide map with a North American Datum of 1983 (NAD38) in the California Teale Albers projection in feet.
   - **Google KML files** saved from Google Maps: My Maps or Google Earth Pro. Maps must show the boundaries of all project areas and extent/type of aquatic resources impacted. Include URL(s) of maps. If this format is used include a spreadsheet with the object ID and attributed with the extent/type of aquatic resources impacted.
   - **Other electronic format** (CAD or illustration format) that provides a context for location (inclusion of landmarks, known structures, geographic coordinates, or USGS DRG or DOQQ). Maps must show the boundaries of all project areas and extent/type of aquatic resources impacted. If this format is used include a spreadsheet with the object ID and attributed with the extent/type of aquatic resources impacted.
   - Aquatic resource maps marked on paper **USGS 7.5 minute topographic maps** or **Digital Orthophoto Quarter Quads (DOQQ)** printouts. Maps must show the boundaries of all project areas and extent/type of aquatic resources impacted. If this format is used include a spreadsheet with the object ID and attributed with the extent/type of aquatic resources impacted.

2. **Photo-Documentation:** Include a unique identifier, date stamp, written description of photo details, and latitude/longitude (in decimal degrees) or map indicating location of photo. Successive photos should be taken from the same vantage point to compare pre/post construction conditions.

REPORT AND NOTIFICATION COVER SHEET

Project:	Three Creeks Parkway Restoration Project		
Permittee:	Contra Costa County Flood Control		
Reg. Meas. ID:	416152	**Place ID:**	830777
WDID:	5B07CR00187	**Construction Storm Water General Permit WDID#:**	_____
Order Effective Date:	16 March 2018		
Order Expiration Date:	15 March 2023		

Report Type Submitted

Part A – Project Reporting	
Report Type 1	☐ **Monthly Report # _____**
Report Type 2	☐ **Annual Report # _____**
Part B - Project Status Notifications	
Report Type 3	☐ **Commencement of Construction**
Report Type 4	☐ **Request for Notice of Completion of Discharges Letter**
Report Type 5	☐ **Request for Notice of Project Complete Letter**
Part C - Conditional Notifications and Reports	
Report Type 6	☐ **Accidental Discharge of Hazardous Material Report**
Report Type 7	☐ **Violation of Compliance with Water Quality Standards Report**
Report Type 8	☐ **In-Water Work/Diversions Water Quality Monitoring Report**
Report Type 9	☐ **Modifications to Project Report**
Report Type 10	☐ **Transfer of Property Ownership Report**
Report Type 11	☐ **Transfer of Long-Term BMP Maintenance Report**

"I certify under penalty of law that I have personally examined and am familiar with the information submitted in this document and all attachments and that, based on my inquiry of those individuals immediately responsible for obtaining the information, I believe that the information is true, accurate, and complete. I am aware that there are significant penalties for submitting false information, including the possibility of fine and imprisonment."

Print Name [1]	**Affiliation and Job Title**
Signature	**Date**

[1]STATEMENT OF AUTHORIZATION (include if authorization has changed since application was submitted)

I hereby authorize _____ to act in my behalf as my representative in the submittal of this report, and to furnish upon request, supplemental information in support of this submittal.

_____ _____
Permittee's Signature Date

***This Report and Notification Cover Sheet must be signed by the Permittee or a duly authorized representative and included with all written submittals.**

Part A – Project Reporting

Report Type 1	Monthly Report
Report Purpose	Notifies Central Valley Water Board staff of the Project status and environmental compliance activities on a monthly basis.
When to Submit	On the 1st day of each month beginning the month after the submittal of the Commencement of Construction Notification until a Notice of Project Complete Letter is issued to the Permittee.
Report Contents	**1. Construction Summary** Describe Project progress and schedule including initial ground disturbance, site clearing and grubbing, road construction, site construction, and the implementation status of construction storm water Best Management Practices (BMPs[11]). If construction has not started, provide estimated start date. **2. Event Summary** Describe distinct Project activities and occurrences, including environmental monitoring, surveys, and inspections. **3. Photo Summary** Provide photos of Project activities. For each photo, include a unique site identifier, date stamp, written description of photo details, and latitude/longitude (in decimal degrees) or map indicating location of photo. Successive photos should be taken from the same vantage point to compare pre/post construction conditions. **4. Compliance Summary** **a)** List name and organization of environmental surveyors, monitors, and inspectors involved with monitoring environmental compliance for the reporting period. **b)** List associated monitoring reports for the reporting period. Include sampling reports. If no sampling was required, a monitoring report must be submitted stated, “No sampling was required”. **c)** Summarize observed incidences of non-compliance, compliance issues, minor problems, or occurrences. **d)** Describe each observed incidence in detail. List monitor name and organization, date, location, type of incident, corrective action taken (if any), status, and resolution.

[11] Best Management Practices (BMPs) is a term used to describe a type of water pollution or environmental control.

Report Type 2	**Annual Report – Not Applicable**
Report Purpose	-
When to Submit	Not Required
Report Contents	-
Annual Report Topics (1-3)	
Annual Report Topic 1	**Construction Summary – Not Applicable**
When to Submit	Not Required
Report Contents	-
Annual Report Topic 2	**Mitigation for Temporary Impacts Status – Not Applicable**
When to Submit	Not Required
Report Contents	-
Annual Report Topic 3	**Compensatory Mitigation for Permanent Impacts Status – Not Applicable**
When to Submit	Not Required
Report Contents	-

Part B – Project Status Notifications

Report Type 3	Commencement of Construction
Report Purpose	Notify Central Valley Water Board staff prior to the start of construction.
When to Submit	Must be received at least seven (7) days prior to start of initial ground disturbance activities.
Report Contents	**1.** Date of commencement of construction. **2.** Anticipated date when discharges to waters of the state will occur. **3.** Project schedule milestones including a schedule for onsite compensatory mitigation, if applicable. **4.** Construction Storm Water General Permit WDID No.

Report Type 4	Request for Notice of Completion of Discharges Letter
Report Purpose	Notify Central Valley Water Board staff that post-construction monitoring is required and that active Project construction, including any mitigation and permittee responsible compensatory mitigation, is complete.
When to Submit	Must be received by Central Valley Water Board staff within thirty (30) days following completion of all Project construction activities.
Report Contents	**1.** Status of storm water Notice of Termination(s), if applicable. **2.** Status of post-construction storm water BMP installation. **3.** Pre- and post-photo documentation of all Project activity sites where the discharge of dredge and/or fill/excavation was authorized. **4.** Summary of Certification Deviation discharge quantities compared to initial authorized impacts to waters of the state, if applicable. **5.** An updated monitoring schedule for mitigation for temporary impacts to waters of the state and permittee responsible compensatory mitigation during the post-discharge monitoring period, if applicable.

Report Type 5	Request for Notice of Project Complete Letter
Report Purpose	Notify Central Valley Water Board staff that construction and/or any post-construction monitoring is complete, or is not required, and no further Project activity is planned.
When to Submit	Must be received by Central Valley Water Board staff within thirty (30) days following completion of all Project activities.
Report Contents	**Part A: Mitigation for Temporary Impacts** **1.** A report establishing that the performance standards outlined in the restoration plan have been met for Project site upland areas of temporary disturbance which could result in a discharge to waters of the state. **2.** A report establishing that the performance standards outlined in the restoration plan have been met for restored areas of temporary impacts to waters of the state. Pre- and post-photo documentation of all restoration sites.

	Part B: Permittee Responsible Compensatory Mitigation **3.** A report establishing that the performance standards outlined in the compensatory mitigation plan have been met. **4.** Status on the implementation of the long-term maintenance and management plan and funding of endowment. **5.** Pre- and post-photo documentation of all compensatory mitigation sites. **6.** Final maps of all compensatory mitigation areas (including buffers). **Part C: Post-Construction Storm Water BMPs** **7.** Date of storm water Notice of Termination(s), if applicable. **8.** Report status and functionality of all post-construction BMPs.

Part C – Conditional Notifications and Reports

Report Type 6	Accidental Discharge of Hazardous Material Report
Report Purpose	Notifies Central Valley Water Board staff that an accidental discharge of hazardous material has occurred.
When to Submit	Within five (5) working days following the date of an accidental discharge. Continue reporting as required by Central Valley Water Board staff.
Report Contents	**1.** The report shall include the OES Incident/Assessment Form, a full description and map of the accidental discharge incident (i.e. location, time and date, source, discharge constituent and quantity, aerial extent, and photo documentation). If applicable, the OES Written Follow-Up Report may be substituted. **2.** If applicable, any required sampling data, a full description of the sampling methods including frequency/dates and times of sampling, equipment, locations of sampling sites. **3.** Locations and construction specifications of any barriers, including silt curtains or diverting structures, and any associated trenching or anchoring.

Report Type 7	Violation of Compliance with Water Quality Standards Report
Report Purpose	Notifies Central Valley Water Board staff that a violation of compliance with water quality standards has occurred.
When to Submit	The Permittee shall report any event that causes a violation of water quality standards within three (3) working days of the noncompliance event notification to Central Valley Water Board staff.
Report Contents	The report shall include: the cause; the location shown on a map; and the period of the noncompliance including exact dates and times. If the noncompliance has not been corrected, include: the anticipated time it is expected to continue; the steps taken or planned to reduce, eliminate, and prevent reoccurrence of the noncompliance; and any monitoring results if required by Central Valley Water Board staff.

Report Type 8	In-Water Work and Diversions Water Quality Monitoring Report
Report Purpose	Notifies Central Valley Water Board staff of the start and completion of in-water work. Reports the sampling results during in-water work and during the entire duration of temporary surface water diversions.
When to Submit	Forty-eight (48) hours prior to the start of in-water work. Within three (3) working days following the completion of in-water work. Surface water monitoring reports to be submitted two (2) weeks on initiation of in-water construction and during entire duration of temporary surface water diversions. Continue reporting in accordance with the approved water quality monitoring plan or as indicated in XIV.C.3.
Report Contents	As required by the approved water quality monitoring plan or as indicated in XIV.C.3.

Report Type 9	**Modifications to Project Report**
Report Purpose	Notifies Central Valley Water Board staff if the Project, as described in the application materials, is altered in any way or by the imposition of subsequent permit conditions by any local, state or federal regulatory authority.
When to Submit	If Project implementation as described in the application materials is altered in any way or by the imposition of subsequent permit conditions by any local, state or federal regulatory authority.
Report Contents	A description and location of any alterations to Project implementation. Identification of any Project modifications that will interfere with the Permittee's compliance with the Order.

Report Type 10	**Transfer of Property Ownership Report**
Report Purpose	Notifies Central Valley Water Board staff of change in ownership of the Project or Permittee-responsible mitigation area.
When to Submit	At least 10 working days prior to the transfer of ownership.
Report Contents	**1.** A statement that the Permittee has provided the purchaser with a copy of this Order and that the purchaser understands and accepts: **a.** the Order's requirements and the obligation to implement them or be subject to administrative and/or civil liability for failure to do so; and **b.** responsibility for compliance with any long-term BMP[12] maintenance plan requirements in this Order. **2.** A statement that the Permittee has informed the purchaser to submit a written request to the Central Valley Water Board to be named as the permittee in a revised order.

Report Type 11	**Transfer of Long-Term BMP Maintenance Report**
Report Purpose	Notifies Central Valley Water Board staff of transfer of long-term BMP maintenance responsibility.
When to Submit	At least 10 working days prior to the transfer of BMP maintenance responsibility.
Report Contents	A copy of the legal document transferring maintenance responsibility of post-construction BMPs.

[12] Best Management Practices (BMPs) is a term used to describe a type of water pollution or environmental control.

SIGNATORY REQUIREMENTS

All Documents Submitted In Compliance With This Order Shall Meet The Following Signatory Requirements:

1. All applications, reports, or information submitted to the Central Valley Water Quality Control Board (Central Valley Water Board) must be signed and certified as follows:

   a) For a corporation, by a responsible corporate officer of at least the level of vice-president.
   b) For a partnership or sole proprietorship, by a general partner or proprietor, respectively.
   c) For a municipality, or a state, federal, or other public agency, by either a principal executive officer or ranking elected official.

2. A duly authorized representative of a person designated in items 1.a through 1.c above may sign documents if:

   a) The authorization is made in writing by a person described in items 1.a through 1.c above.
   b) The authorization specifies either an individual or position having responsibility for the overall operation of the regulated activity.
   c) The written authorization is submitted to the Central Valley Water Board Staff Contact prior to submitting any documents listed in item 1 above.

3. Any person signing a document under this section shall make the following certification:

   "I certify under penalty of law that I have personally examined and am familiar with the information submitted in this document and all attachments and that, based on my inquiry of those individuals immediately responsible for obtaining the information, I believe that the information is true, accurate, and complete. I am aware that there are significant penalties for submitting false information, including the possibility of fine and imprisonment."

Certification Deviation Procedures

Introduction

These procedures are put into place to preclude the need for Order amendments for minor changes in the Project routing or location. Minor changes or modifications in project activities are often required by the Permittee following start of construction. These deviations may potentially increase or decrease impacts to waters of the state. In such cases, a Certification Deviation, as defined in Section M of the Order, may be requested by the Permittee as set forth below:

Process Steps

Who may apply: The Permittee or the Permittee's duly authorized representative or agent (hereinafter, "Permittee") for this Order.

How to apply: By letter or email to the 401 staff designated as the contact for this Order.

Certification Deviation Request: The Permittee will request verification from the Central Valley Water Board staff that the project change qualifies as a Certification Deviation, as opposed to requiring an amendment to the Order. The request should:

1. Describe the Project change or modification:
    a. Proposed activity description and purpose;
    b. Why the proposed activity is considered minor in terms of impacts to waters of the state;
    c. How the Project activity is currently addressed in the Order; and,
    d. Why a Certification Deviation is necessary for the Project.
2. Describe location (latitude/longitude coordinates), the date(s) it will occur, as well as associated impact information (i.e., temporary or permanent, federal or non-federal jurisdiction, water body name/type, estimated impact area, etc.) and minimization measures to be implemented.
3. Provide all updated environmental survey information for the new impact area.
4. Provide a map that includes the activity boundaries with photos of the site.
5. Provide verification of any mitigation needed according to the Order conditions.
6. Provide verification from the CEQA Lead Agency that the proposed changes or modifications do not trigger the need for a subsequent environmental document, an addendum to the environmental document, or a supplemental EIR. (Cal. Code Regs., tit. 14, §§ 15162-15164.)

Post-Discharge Certification Deviation Reporting:

1. Within 30 calendar days of completing the approved Certification Deviation activity, the Permittee will provide a post-discharge activity report that includes the following information:
    a. Activity description and purpose;
    b. Activity location, start date, and completion date;
    c. Erosion control and pollution prevention measures applied;
    d. The net change in impact area by water body type(s) in acres, linear feet and cubic yards;
    e. Mitigation plan, if applicable; and,
    f. Map of activity location and boundaries; post-construction photos.

Annual Summary Deviation Report:

1. Until a Notice of Completion of Discharges Letter or Notice of Project Complete Letter is issued, include in the Annual Project Report (see Construction Notification and Reporting attachment) a compilation of all Certification Deviation activities through the reporting period with the following information:
    a. Site name(s).
    b. Date(s) of Certification Deviation approval.
    c. Location(s) of authorized activities.
    d. Impact area(s) by water body type prior to activity in acres, linear feet and cubic yards, as originally authorized in the Order.
    e. Actual impact area(s) by water body type in, acres, linear feet and cubic yards, due to Certification Deviation activity(ies).
    f. The net change in impact area by water body type(s) in acres, linear feet and cubic yards;
    g. Mitigation to be provided (approved mitigation ratio and amount).

404 Water Quality Certification (USACE)

DEPARTMENT OF THE ARMY
U.S. ARMY CORPS OF ENGINEERS, SACRAMENTO DISTRICT
1325 J STREET
SACRAMENTO CA 95814-2922

October 28, 2019

Regulatory Division (SPK-2016-00934)

Contra Costa County Flood Control and Water Conservation District
Attn: Mr. Mike Carlson
2612 8th Street, Suite B
Berkeley, California 94710

Dear Mr. Carlson:

We are responding to your June 10, 2019, request for a Department of the Army permit for the Three Creeks Parkway Restoration project. This approximately 23.08-acre project involves activities, including discharges of dredged or fill material, in waters of the United States, to construct a improve flood conveyance capacity and restore ecological function along an approximately 4,000 linear foot section of Marsh Creek. The project site is located along Marsh Creek at the confluences of Sand Creek and Deer Creek, Latitude 37.938389°, Longitude -121.707037°, Brentwood, East Contra Costa County, California.

Based on the information you provided, the proposed activity, resulting in the permanent loss of approximately 0.048-acre of perennial stream and temporary impacts to approximately 0.16-acre of perennial stream, is authorized by Regional General Permit number 1*, Minimal Impact Activities - East Contra Costa* County. Your work must comply with the terms and conditions of Regional General Permit number 1, which are available on our website at *http://www.spk.usace.army.mil/Missions/Regulatory/Permitting/Regional-and-Programmatic-General-Permits/*. In addition, your work must comply with the following special conditions:

Special Conditions

1. If you discover any previously unknown historic or archeological remains while accomplishing the activity authorized by this permit, you shall immediately notify this office of what you have found. This office will initiate the Federal and state coordination required to determine if the remains warrant a recovery effort or if the site is eligible for listing in the National Register of Historic Places.

You must sign the enclosed Compliance Certification and return it to this office within 30 days after completion of the work in waters of the U.S. authorized by this permit.

This verification is valid for 5 years from the date of this letter or until the Regional General Permit is modified, reissued, or revoked, whichever comes first. Failure to comply with the terms and conditions, including project-specific Special Conditions of this authorization, may result in the suspension or revocation of your authorization.

We appreciate your feedback. At your earliest convenience, please tell us how we are doing by completing the customer survey on our website under *Customer Service Survey*.

Please refer to identification number SPK-2016-00934 in any correspondence concerning this project. If you have any questions, please contact Chandra Jenkins, by email at *Chandra.L.Jenkins@usace.army.mil*, or telephone at (916) 557-6652. For more information regarding our program, please visit our website at *www.spk.usace.army.mil/Missions/Regulatory.aspx*.

Sincerely,

Chandra Jenkins
Senior Project Manager
California Delta Section

Enclosures

cc: (w/o encls)
Mr. Rich Walking, Restoration Design Group, Rich@RGDmail.com
Ms. Stephanie Jentsch, U.S. Fish and Wildlife Service, Stephanie_Jentsch@FWS.gov
Ms. Kristin McCleery, National Marine Fisheries Service, Kristin.McCleery@NOAA.gov
Ms. Koren Tippett, California Office of Historic Preservation, Koren.Tippett@Parks.ca.gov
Mr. Nocholas White, Central Valley Regional Water Quality Control Board, Nicholas.White@Waterboards.ca.gov

COMPLIANCE CERTIFICATION

Permit File Number: SPK-2016-00934

Regional General Permit Number:

Permittee: Contra Costa County Flood Control & Water Cons. District
Attn: Mr. Mike Carlson
255 Glacier Drive
Martinez, California 94553

County: Contra Costa County

Date of Verification: October 28, 2019

Within 30 days after completion of the activity authorized by this permit, sign this certification and return it to the following address:

U.S. Army Corps of Engineers
Sacramento District

DLL-CESPK-RD-Compliance@usace.army.mil

Please note that your permitted activity is subject to a compliance inspection by a U.S. Army Corps of Engineers representative. If you fail to comply with the terms and conditions of the permit your authorization may be suspended, modified, or revoked. If you have any questions about this certification, please contact the U.S. Army Corps of Engineers.

* * * * * * * * *

I hereby certify that the work authorized by the above-referenced permit, including all the required mitigation, was completed in accordance with the terms and conditions of the permit verification.

_____ _____
Signature of Permittee Date

Regional General Permit 1

U.S. ARMY CORPS OF ENGINEERS BUILDING STRONG®

Minimal Impact Activities
East Contra Costa County, California

EFFECTIVE: June 6, 2017
EXPIRES: June 6, 2022

NOTE: The term "you" and its derivatives, as used in this permit, means the permittee. The term "this office" refers to the U.S. Army Corps of Engineers, Sacramento District.

ISSUING OFFICE: U.S. Army Corps of Engineers, Sacramento District

ACTION ID: SPK-2001-00147

AUTHORITY: Section 404 of the Clean Water Act for the discharge of dredged or fill material in waters of the United States.

PURPOSE: The purpose of this RGP is to provide a simplified and expeditious means to authorize activities in waters of the United States (U.S.), including wetlands, that are substantially similar in nature and cause only minimal individual and cumulative impacts, within the area covered by the East Contra Costa County Habitat Conservation Plan/Natural Community Conservation Plan (HCP/NCCP), dated December, 2006. This RGP is part of an overall strategy envisioned in the HCP/NCCP to balance the protection of important natural resources with long term economic development in the area covered by the HCP/NCCP. The HCP/NCCP is intended to enhance protection of important natural resources, including 28 listed and non-listed species and waters of the United States, by coordinating conservation activities at a regional and watershed scale, enabling protection of large, contiguous resource-rich areas and preservation of ecosystem processes and watershed functions. Appendix J of the HCP/NCCP contains a partial inventory and assessment of the functions and services of waters of the U.S. located within the HCP/NCCP Plan Area. The HCP/NCCP, associated documents and other program information are available to the public at: http://www.cocohcp.org. Definitions associated with this RGP are provided under the "Definitions" section at the end of the RGP.

LOCATION: The area covered by this RGP is east Contra Costa County, including the cities of Clayton, Brentwood, Oakley, and Pittsburg, and other areas of east Contra Costa County. It is geographically coincident with the "Plan Area" of the HCP/NCCP (see *Figures 1a* and *1b*).

ACTIVITIES COVERED: This RGP authorizes specific categories of activities with minimal individual and cumulative impacts on the aquatic environment that meet the terms and conditions of this permit. Temporary structures, fills, and work necessary to construct an activity authorized by this RGP (e.g., cofferdams, access roads) are allowed, provided such

work complies with the terms and conditions of this RGP inclusive of special conditions that the Corps may add. This RGP applies only to HCP/NCCP Covered Activities, as set forth in Section 2.3 of the HCP/NCCP (also see Definitions section). Any question as to whether a proposed activity is considered a Covered Activity under the HCP/NCCP shall be subject to confirmation by the East Contra Costa County Habitat Conservancy (Conservancy) (see Definitions section). The HCP/NCCP Covered Activities are divided among the following Activity categories in this RGP for purposes of assigning Activity-specific conditions (see section Activity Specific Conditions):

1. Residential, commercial, industrial, institutional, and other urban developments and associated infrastructure inside the Urban Limit Line of Contra Costa County or inside the City Limits of the Cities of Brentwood, Clayton, Oakley and Pittsburg, including but not limited to roads, utilities, parks, storm water management facilities, and water supply and delivery facilities. (Activity-specific conditions: 1 through 4).

2. Recreation projects, including parks, picnic areas, staging areas, trails and park maintenance facilities. Applies only to the activities set forth in Sections 2.3.2 and 2.3.4 of the HCP/NCCP. (Activity-specific conditions: 1 through 4).

3. Flood control detention basins, reservoirs[1], channels, and related facilities. Applies only to the specific planned facilities set forth in Section 2.3.2 of the HCP/NCCP. (Activity-specific conditions: 1 through 4).

4. Transportation projects, including road construction and widening, bicycle trails, rail projects, bridges and safety-related projects. Applies only to the specific planned facilities set forth in Section 2.3.2 of the HCP/NCCP. (General conditions apply only).

5. Wetland and stream restoration, creation, enhancement and management. Applies only to activities set forth in Sections 2.3.2 and 2.3.4 of the HCP/NCCP. (Activity-specific conditions: 1, 2 and 4).

6. Utility projects, including electrical transmission projects, cellular communication projects and pipelines. Applies only to the activities set forth in Sections 2.3.2 and 2.3.4 of the HCP/NCCP. (Activity-specific condition 4).

7. Maintenance, repair, rehabilitation or replacement of any previously authorized (under the RGP or other Corps permit), currently serviceable, structure or fill. Applies only to the maintenance activities set forth in Sections 2.3.1 and 2.3.3 of the HCP/NCCP. (General conditions apply only).

This RGP does not cover any activities in waters of the U.S. conducted in emergency situations.

---

[1] The proposed Los Vaqueros Reservoir Expansion project is not covered by the HCP/NCCP as per Section 2.4 of the HCP/NCCP

PERMIT DURATION: This permit is valid for five years from issuance, and will expire on June 6, 2022. If this RGP is not modified or reissued by the expiration date, it automatically expires and becomes null and void. The Corps may re-evaluate the terms and conditions of this permit at any time it deems necessary to protect the public interest. This permit may be re-issued, after public notice and documentation of the decision. Activities under this permit must be verified in writing by the Corps. Verifications are valid until the permit expires.

TERMS OF AUTHORIZATION:

1. **Applying for RGP authorization**. Prior to commencing a proposed activity, applicants seeking authorization under this RGP shall notify the Corps in accordance with RGP general condition number 18 (Notification). If the Corps determines that an activity is not an eligible activity under the RGP, it will notify the applicant in writing within thirty (30) calendar days and provide instructions on the procedures to seek authorization under a standard permit, letter of permission or Nationwide permit. If the Corps determines that a proposed activity is eligible for coverage under the RGP, it will notify the applicant within 45 calendar days of receipt of a complete application. If the Corps does not provide a written response to the applicant within 45 calendar days following receipt of a complete application, the applicant may presume the proposed activity is an eligible activity that may be covered under the RGP, provided the activity complies with all other terms and conditions of the RGP.

2. **Impact Thresholds for waters of the U.S.** Impacts to waters of the U.S. shall be avoided and minimized to the maximum extent practicable. The loss of waters of the U.S. (including wetlands) resulting from individual project impacts may not exceed a total of 1.5 acres or more than 300 linear feet of perennial, intermittent or 3rd or higher order ephemeral streams (as defined in Table 2 of the RGP and further described in the HCP/NCCP), unless the linear foot limit is waived in writing by the Corps. Additional restrictions are listed in the General and Activity-Specific Conditions.

3. **Single and complete project**. The activity must be a single and complete project (see Definitions section). The same RGP authorization cannot be used more than once for the same single and complete project.

4. **After-the-fact projects**. This RGP may not be used to authorize activities after they have impacted waters of the U.S.

5. **Compliance with HCP/NCCP Conditions**. Activities to be authorized under this RGP must be HCP/NCCP Covered Activities and must fully comply with the HCP/NCCP. Compliance with the HCP/NCCP requires applicants to implement the appropriate conservation measures outlined in Chapter 6 of the HCP/NCCP.

6. **Special conditions**. The Corps may add special conditions to an authorization to ensure the activity complies with the terms and conditions of the RGP, and/or that adverse

impacts on the aquatic environment or other aspects of the public interest are individually and cumulatively minimal.

7. **Activity completion**. Any activity authorized by the Corps under the RGP shall be completed by the date specified in "Permit Duration," above. Furthermore, activities authorized under this RGP that have commenced or are under contract to commence will have 12 months from the date of the RGP's expiration, reissuance, modification or revocation to complete the activity under the terms and conditions of the RGP.

8. **Discretionary Authority**. The Corps has the discretion to suspend, modify, or revoke authorizations under this RGP. This discretionary authority may be used by the Corps to also further condition or restrict the applicability of the RGP for cases in which it has concerns associated with the Clean Water Act Section 404(b)(1) Guidelines, or regarding any public interest factor. Should the Corps determine that a proposed activity may have more than minimal individual or cumulative adverse impacts to aquatic resources or otherwise be contrary to the public interest, the Corps will modify the authorization to reduce or eliminate those adverse effects, or notify the applicant that the proposed activity is not authorized by the RGP and provide instructions on how to seek authorization under an individual permit. The Corps may restore authorization under the RGP at any time it determines that the reason for asserting discretionary authority has been resolved or satisfied by a condition, project modification, or new information. The Corps may also use its discretionary authority to modify, suspend, or revoke the RGP at any time.

GENERAL CONDITIONS:

The following general conditions apply to all Activity categories:

1. **Threatened and Endangered Species**: No activity is authorized under the RGP that does not comply with the mandatory terms and conditions of the USFWS's "Programmatic Biological Opinion for a Regional General Permit for the East Contra Costa Habitat Conservation Plan/Natural Community Conservation Plan, Contra Costa County, California" (USFWS #81420-2011-F-0655, dated April 30, 2012) (copy attached). The Biological Opinion contains mandatory terms and conditions to implement the reasonable and prudent measures that are associated with "incidental take" authorization under this RGP. Authorization under this RGP is conditional upon your compliance with all of the mandatory terms and conditions of the Biological Opinion. Failure to comply with the terms and conditions of the Biological Opinion would constitute non-compliance with the RGP. The USFWS is the appropriate authority to determine compliance with the terms and conditions of the Biological Opinion, and with the ESA. The permittee must comply with all applicable conditions of this Biological Opinion, including those ascribed to the Corps. If the proposed activity may affect Federally-listed endangered or threatened species that are not covered under the Programmatic Biological Opinion, specifically, species under the authority of the National Marine Fisheries Service, the Corps will initiate consultation with the National Marine Fisheries Service, pursuant to Section 7 of the Endangered Species Act, as appropriate.

2. **Water Quality Certification**: Section 401 Water Quality Certification is required for activities to be authorized by this RGP. The Corps may require additional water quality management measures to ensure that the authorized activity does not result in more than minimal impacts, individually or cumulatively.

3. **Historic Properties**: No activity is authorized under the RGP if the activity may affect historic properties listed, or eligible for listing, in the National Register of Historic Places, until the requirements of Section 106 of the National Historic Preservation Act (NHPA), as amended, have been satisfied. Applicants must notify the Corps if the activity may have the potential to cause effects to any historic properties listed, determined to be eligible for listing on, or potentially eligible for listing on the National Register of Historic Places, including previously unidentified historic properties. The Corps will consult with the State Historic Preservation Officer (SHPO), as appropriate, following the policy and procedural standards of 33 CFR Part 325 Appendix C .

4. **Unanticipated Cultural Resources Discoveries**: If any previously unknown historic, cultural or archeological remains or artifacts are discovered while accomplishing an activity authorized by this RGP, this permit, the applicant must immediately notify the Corps, and to the maximum extent practicable, avoid construction activities that may affect the remains and artifacts until the required coordination has been completed. The Corps will initiate the Federal, Tribal, and state coordination required to determine if the items or remains warrant a recovery effort or if the site is eligible for listing in the National Register of Historic Places.

5. **Fills within 100-Year Floodplains**: The activity must comply with applicable FEMA-approved state or local floodplain management requirements.

6. **Bed and Bank Stabilization**: Bank stabilization activities are limited to: a) using the minimum amount of material needed for erosion protection; b) no more than 500 feet in length along the bank, unless this criterion is waived in writing by the Corps; and c) no more than an average of 1 cubic yard of material per running foot placed along the bank below the plane of the ordinary high water mark or high tide line, unless this criterion is waived in writing by the Corps.

7. **Best Management Practices**: Best Management Practices (BMPs) must be employed during construction and in project design to protect water quality and minimize impacts of stormwater runoff on aquatic resources. BMPs should be appropriately located in or adjacent to waters of the U.S. (e.g., silt curtains). The applicant shall employ the following BMPs, as appropriate and feasible, in designing and constructing the project. The applicant shall describe which BMPs are practicable as part of the notification procedure as per general condition #18, subpart (b):

a. Preservation of natural resource features on the project site (e.g., floodplains, wetlands, streams, and other drainageways, grasslands, woodlands, and native soils);

b. Preservation of natural water infiltration and storage characteristics of the site;

c. Minimization of new impervious surfaces in project design (impervious surfaces may be minimized through practices such as reducing road widths and clustering developments designed around open space);

d. Structural measures that provide water quality and quantity control;

e. Construction BMPs;

f. Low impact development (LID) BMPs.

Examples of structural BMPs include: vegetated natural buffers, grassed swales, infiltration trenches, level spreaders and channel grade controls. Examples of construction BMPs include: matting and filter fencing, or other barrier methods to intercept/capture sediment.

8. **Proper Maintenance**: Any authorized structure or fill shall be properly maintained, including maintenance necessary to ensure public safety and the movement of aquatic organisms.

9. **Aquatic Life Movements**: No activity may substantially disrupt the necessary life cycle movement of aquatic species indigenous to the water body, including those species that normally migrate through the area, unless the activity's primary purpose is to impound water. Culverts placed in streams must be installed to maintain low-flow conditions. If feasible, they should be designed as open-bottom culverts.

10. **Equipment**: Heavy equipment working in wetlands must be placed on mats, or other measures, such as low-ground pressure equipment, must be taken to minimize soil disturbance.

11. **Tribal Rights**: No activity or its operation may impair reserved Tribal rights, including, but not limited to, reserved water rights and treaty fishing and hunting rights.

12. **Water Supply Intakes**: No discharge of dredged or fill material may occur in the proximity of a public water supply intake, except where the discharge is for the repair or improvement of the intake structure(s), and/or adjacent bank stabilization.

13. **Suitable Material**: No discharge of dredged or fill material may consist of unsuitable material and material discharged must be free from toxic pollutants in toxic amounts (section 307 of the Clean Water Act). Unsuitable material includes, but is not limited to, trash, debris, car bodies, and asphalt.

14. **Management of Water Flows**: To the maximum extent practicable, the pre-construction course, condition, capacity, and location of open waters must be maintained. The activity must be constructed to withstand expected high flows. The activity must not restrict or impede the passage of normal or high flows, unless the primary purpose of the activity is to impound water or manage high flows. The activity may alter the pre-construction course, condition, capacity,

and location of open waters if it benefits the aquatic environment (e.g., stream restoration project).

15. **Migratory Bird Breeding Areas**: Activities in waters of the U.S. that serve as breeding areas for migratory birds shall be avoided to the maximum extent practicable.

16. **Removal of Temporary Fills and Restoration of Affected Areas**: Temporary fills shall be removed in their entirety and the affected areas returned to pre-construction elevations. The affected areas shall be revegetated with native vegetation upon completion of the project. A restoration plan, which includes a 1-foot contour topographic map, must be submitted with the notification to the Corps.

17. **Compensatory Mitigation**: Compensatory mitigation for unavoidable impacts to waters of the U.S. must be accomplished by conforming to the minimum mitigation ratios set by the HCP/NCCP, as summarized in Table 1. Mitigation proposals are required to be consistent with the Federal mitigation rule (33 CFR Part 332).

a. The preferred mechanism for providing compensatory mitigation is by acquiring mitigation bank credits or in-lieu fee (ILF) program credits from a Corps-approved bank or ILF program, respectively. However, if an appropriate number and type of mitigation bank or ILF credits are not available at the time of notification (see general condition #18), permittee-responsible mitigation may be proposed. Pursuant to the Federal mitigation rule, the preference hierarchy for use of banks, ILF programs and permittee-responsible to fulfill compensatory mitigation requirements can be overridden based on project-specific considerations (33 CFR 332[b][2]).

b. Prior to proceeding with the activity authorized by this RGP, a final mitigation plan must be approved by the Corps, and mitigation fees (if applicable, e.g., bank and/or ILF program) must be paid. When mitigation fees are applicable, evidence of fee payment must be provided to the Corps before commencement of the activity authorized by this RGP can be initiated.

c. If the RGP verification includes permittee-responsible compensatory mitigation, the mitigation plan must contain a reporting procedure consistent with the Corps' mitigation rule (33 CFR Part 332.4[c][10]), Monitoring Requirements, as well as any Sacramento District and/or South Pacific Division compensatory mitigation guidance applicable at the time of application review.

18. **Notification**: The applicant shall provide written notification (i.e., a complete application) for a proposed activity to be authorized under the RGP prior to commencing the activity. The Corps' receipt of the complete application is the date when the Corps receives all required notification information from the applicant (see below). Written notification shall include all of the following:

a. A letter signed by the applicant requesting authorization under the RGP, identifying the Activity Category(s), a description of the proposed activity, the location of the activity (with latitude and longitude), and the area (in acres, and/or linear feet as applicable) of waters of the U.S., including wetlands, to be impacted;

b. For each general and applicable activity-specific condition of this RGP, a brief narrative describing how the activity would comply with the condition, or that the condition does not apply;

c. A vicinity map, plan-view and cross-section drawings clearly depicting the location, size and dimensions of the proposed activity, including areas to be used for access and staging. The drawings shall contain a title block, legend and scale, nearby structures, parcel boundaries, and dimensions of the proposed dock and associated access. Unless waived on a case by case basis at the Corps' discretion, all drawings shall comply with the Updated Map and Drawing Standards for the South Pacific Division Regulatory Program, which can be found at http://www.spd.usace.army.mil/Missions/Regulatory/Public-Notices-and-References/Article/651327/updated-map-and-drawing-standards/.

d. A delineation of aquatic resources in accordance with the Sacramento District's Minimum Standards for Acceptance of Aquatic Resources Delineation Reports (available at http://www.spk.usace.army.mil/Portals/12/documents/regulatory/jd/minimum-standards/Minimum_Standards_for_Delineation_with_Template-final.pdf), or updated standards adopted by the Sacramento District, unless specifically waived by the Sacramento District.

e. A written statement explaining how the activity has been designed to avoid and minimize adverse effects, both temporary and permanent, to waters of the U.S.

f. A cultural resource survey report for the project site, including all staging, access and construction areas. The report must be prepared in accordance with the March 24, 2014, Sacramento District Guidelines for Compliance with Section 106 of the NHPA, which can be found at http://www.spk.usace.army.mil/Portals/12/documents/regulatory/sec-106-tribal/FINAL_2014-03-24_Section-106-Guidelines.pdf (or more recent guidance, if applicable).

If the Corps determines that the activity complies with the terms and conditions of the RGP, including confirmation that proposed impacts to aquatic resources are minimal, the Corps will notify the applicant in writing and include any special conditions deemed necessary. If the Corps determines the impacts of the proposed activity are more than minimal, the Corps will notify the applicant that the project does not qualify for authorization under the RGP and instruct the applicant on the procedures to seek authorization under an individual permit.

19. **Reporting Responsibilities**: The permittee must submit a letter report to the Corps within 30 days of project completion. The report will contain the following:

a. The Corps' file number;
b. Photographs showing pre- and post-construction project conditions;
c. A completed compliance certification.

20. **Access**: The permittee must allow representatives from the Corps to inspect the authorized activity at any time deemed necessary to ensure that it is being or has been accomplished in accordance with the terms and conditions of the permit.

21. **Transfer of RGP Authorization**: If the permittee sells the property associated with this permit, the permittee must obtain the signature and mailing address of the new owner on the permit verification letter, and forward a copy to this office to validate the transfer.

ACTIVITY SPECIFIC GENERAL CONDITIONS:

The following general conditions apply to Activity categories specified at the end of each condition.

1. **Stream Setbacks**. Consistent with the requirements of the HCP/NCCP, stream setbacks shall be established. See the HCP/NCCP for detailed stream setback requirements, summarized in Table 2 of this RGP. Waters of the U.S. shall not be filled in order to meet the buffer requirements (Activity categories 1, 2, 3 and 5).

2. **Permanent Protections**. All preserved, created, restored or enhanced waters of the U.S. and adjacent buffers on the project site shall be preserved and permanently protected through a deed restriction, conservation easement, or other appropriate real estate or legal instrument, consistent with the requirements of the HCP/NCCP as determined by the Corps. A recorded copy of the real estate instrument must be provided to the Corps prior to proceeding with any activity otherwise authorized by this RGP (Activity categories 1, 2, 3 and 5).

3. **Fencing and Signage**. Preserved areas on the project site must be fenced and signed as sensitive areas to discourage human disturbance (Activity categories 1, 2 and 3).

4. **Utility Lines**. All utility lines shall be constructed in accordance with the following:

a. The construction area for linear utility line projects shall be limited to a width of 75 feet, unless this limit is waived in writing by the Corps.

b. For utility line projects, directional drilling, clear span or other techniques that do not contact the waterbody shall be used if the waterbody contains perennial flow.

c. Material resulting from trench excavation may be temporarily sidecast (up to 60 days) into waters of the U.S., provided that the material is not placed in such a manner

that is dispersed by currents or other forces. The Corps may extend the period of temporary side casting for no more than a total of 180 days, where appropriate.

d. Utility lines must not adversely alter existing hydrology, including draining of wetlands. In wetland areas, utility line trenches shall be lined with clay, or other impermeable materials or structures (such as cut-off walls) to ensure that the trench through which the utility line is installed does not drain waters of the U.S. In addition, to prevent a french drain effect, gravel cannot be used as backfill material in the top 10 feet of the trench.

e. In wetland areas, the top 6”-12” of the trench shall be backfilled with topsoil excavated from the trench in the same stratification in which it was removed.

f. Excess material shall be removed to upland areas immediately upon completion of utility line construction in any segment of the project containing waters of the U.S. In no case shall the excess material be left in place until the entire utility line is completed.

g. The construction area, including unprotected slopes and streambanks, shall be stabilized (e.g., blanketed and seeded) immediately upon completion of the utility line construction in any segment of the project. In no case shall soil stabilization be delayed until the entire utility line is completed.

h. Temporarily disturbed construction areas must be restored to pre-construction conditions, including grading to original contours and revegetating (with native vegetation or other appropriate vegetation approved by the Corps) immediately upon completion of the project. A restoration plan, which includes a 1-foot contour topographic map, shall be submitted with notification (Activity categories 1, 2, 3, 5 and 6).

DEFINITIONS:

Activity is any discharge of dredged or fill material into waters of the U.S. under Section 404 of CWA.

Activity categories are descriptions of HCP/NCCP Covered Activities listed in this RGP for purposes of assigning activity-specific conditions.

Activity-specific conditions are RGP conditions that would apply to specified Activity categories defined in this RGP.

Applicant is the individual, organization, or company requesting authorization under the RGP.

Authorization is written verification by the Corps that an activity qualifies for, and may proceed under, the RGP provided all terms and conditions of the RGP are followed.

Compensatory mitigation is the restoration, establishment (creation), enhancement, and/or in certain circumstances preservation of aquatic resources for the purposes of offsetting unavoidable adverse impacts which remain after all appropriate and practicable avoidance and minimization has been achieved. See also "in-lieu fee" definition.

Complete application is all required notification materials that must be submitted by the applicant to the Corps, as listed in general condition #18. If all materials are not submitted, the application is considered incomplete.

Conservancy is the East Contra Costa County Habitat Conservancy, a joint exercise of powers agency formed by the Cities of Brentwood, Clayton, Oakley and Pittsburg and Contra Costa County to perform the role of Implementing Entity for the HCP/NCCP.

Emergency refers to the guidance provided in 33 CFR 325.2(e)(4): "…a situation which would result in an unacceptable hazard to life, a significant loss of property, or an immediate, unforeseen, and significant economic hardship if corrective action requiring a permit is not undertaken within a time period less than the normal time needed to process the application under standard procedures. This RGP does not cover any activities in waters of the U.S. conducted in emergency situations.

General conditions are RGP conditions that would apply to all activities authorized.

HCP/NCCP is the East Contra Costa County Habitat Conservation Plan/Natural Community Conservation Plan dated December, 2006. The United States Fish and Wildlife Service ("USFWS"), under incidental take permit TE 160958-0, and the California Department of Fish and Game ("CDFG"), under incidental take permit 2835-2007-01-03, have approved the HCP/NCCP and have authorized the "HCP/NCCP Permittees" to take certain species of plants and wildlife listed under the ESA and/or covered under the state of California's Natural Community Conservation Planning Act (NCCPA) while carrying out or approving certain development and other "covered activities." Take is defined under Federal and state laws.

HCP/NCCP Covered Activity means an activity or project within one of the categories of activities set forth in Section 2.3 of the HCP/NCCP that has been approved by an HCP/NCCP Permittee for coverage under the HCP/NCCP.

HCP/NCCP Permittee is any of the following eight local agencies that have approved the HCP/NCCP and have been authorized by USFWS and CDFG to take certain species, as take is defined respectively under Federal and state law. These are the Cities of Brentwood, Clayton, Oakley and Pittsburg, Contra Costa County, the Contra Costa County Flood Control and Water Conservation District, the Conservancy, and the East Bay Regional Park District.

Historic properties are as defined in 36 CFR Part 800.16(l). It means any prehistoric or historic district, site, building, structure, or object included in, or eligible for inclusion in, the National Register of Historic Places maintained by the Secretary of the Interior. This term includes artifacts, records, and remains that are related to and located within such properties. The term

includes properties of traditional religious and cultural importance to an Indian tribe or Native Hawaiian organization and that meet the National Register criteria.

Impact is the direct and indirect loss of waters of the U.S., including wetlands, which results from the discharge of dredged and/or fill material into waters of the U.S. associated with implementation of a proposed activity. See also “loss of waters” definition.

Independent utility is a test to determine what constitutes a single and complete non-linear project in the Corps Regulatory Program. A project is considered to have independent utility if it would be constructed absent the construction of other projects in the project area. Portions of a multi-phase project that depend upon other phases of the project do not have independent utility. Phases of a project that would be constructed even if the other phases were not built can be considered as separate single and complete projects with independent utility.

In-lieu fee refers to an in-lieu fee (ILF) program as defined in 33 CFR Part 332.2. An ILF program involves the restoration, establishment (creation), enhancement and/or preservation of aquatic resources through funds paid to a governmental or non-profit natural resources management entity to satisfy compensatory mitigation (see above definition) requirements for Department of the Army (DA) permits. As required by 33 CFR Part 332.8(a), all ILF programs must be approved prior to being used to provide compensatory mitigation for projects authorized by the Corps.

Loss of waters of the U.S. refers to waters that are permanently adversely affected by filling, flooding, excavation, or drainage because of the regulated activity. Permanent adverse effects include permanent discharges of dredge or fill material that change an aquatic area to dry land, increase the bottom elevation of a waterbody, or change the use of an aquatic feature. The acreage of loss of waters of the U.S. is a threshold measurement of the impact to jurisdictional waters for determining if the project may qualify for the RGP; it is not a net threshold that is calculated after considering compensatory mitigation that may be used to offset losses of aquatic functions and services. The loss of stream bed includes the acres or linear feet of stream bed that are filled or excavated as a result of the regulated activity.

Mitigation bank is a site where aquatic resources (e.g., wetlands, streams) are restored, established, enhanced, and/or preserved for the purpose of providing compensatory mitigation for impacts authorized by DA permits.

Notification is the submission of required information by the applicant to the Corps for a complete application.

Permittee is an entity that has received authorization to conduct activities in waters of the U.S. under this RGP.

Permittee-responsible mitigation refers to a type of compensatory mitigation as defined in 33 CFR Part 332.2, entailing aquatic resource restoration, establishment, enhancement, and/or

preservation activity undertaken by the permittee (or an authorized agent or contractor) to provide compensatory mitigation for which the permittee retains full responsibility.

Plan Area is the area shown in Figure 1-1 of the HCP/NCCP and *Figures 1a* and *1b* of this RGP. It is the area analyzed by the HCP/NCCP and covered by the USFWS and CDFG incidental take permits issued pursuant to the HCP/NCCP. In the HCP, the Plan Area is also referred to as the "Inventory Area." This RGP uses the term Plan Area.

Project site is the land, including waters of the U.S. and uplands, utilized for a single and complete project. The project site includes the land cleared, graded, and/or filled to construct the single and complete[2] project, including any buildings, utilities, stormwater management facilities, roads, yards, and other attendant features. Temporary construction areas (e.g., access and staging) are included. The project site also includes any other land and attendant features that are used in conjunction with the single and complete project, such as open space, roads and utilities.

Single and complete linear project is a project constructed for the purpose of getting people, goods, or services from a point of origin to a terminal point, which often involves multiple crossings of one or more waterbodies at separate and distant locations, as defined in the Final Rule for Issuance of the 2017 Nationwide Permits (Federal Register Vol. 82[4], January 6, 2017).
Single and complete non-linear project is the total project proposed or accomplished by one owner/developer or partnership or other association of owners/developers. A single and complete non-linear project must have independent utility (see definition of ''independent utility'').

Special conditions are conditions added by the Corps for projects on a case-by case basis to ensure an activity has minimal impacts on aquatic resources and complies with the RGP. The Corps' authority to require special conditions is provided in 33 CFR Part 325.4(a).

Stream order refers to the numeric identification of the reaches within a stream network. This document follows the stream ordering system of Strahler (1964)[3]. In this system, a first order stream is a stream with an identifiable bed and bank, without any tributary streams. A second order stream is formed by the confluence of two first order streams. A third order stream is formed by the confluence of two second order streams, and so on. Addition of a lesser order stream does not change the stream order of the trunk stream.

Suspension is the temporary cancellation of the authorization while a decision is made to modify, revoke or reinstate the authorization.

---

[2] Linear or non-linear (see definitions below).
[3] Strahler, A.N. 1964. Quantitative Geomorphology of drainage basins and channel networks; section 4-2, in *Handbook of Applied Hydrology*, ed. Ven te Chow, McGraw-Hill, New York.

Terms and conditions are the parameters, including thresholds, limitations and requirements, for completing an activity under the RGP. These parameters are described in each Activity category and in the general conditions and Activity-specific conditions. Special conditions may also be added by the Corps on individual authorizations to ensure an activity has minimal individual and cumulative impacts.

Urban Limit Line is the boundary for urban growth that has been set for Contra Costa County in the Contra Costa County General Plan, as amended from time to time.

Utility line is any pipeline used to transport a gaseous, liquid, liquefiable or slurry substance for any purpose, and any cable, line or wire used to transmit electrical energy, telephone, radio signals, television signals or data communication. This definition does not include pipes or ditches which serve to drain a water of the United States, such as drainage tile; however, it does apply to pipes conveying drainage from one area to another.

Waters of the U.S. are as defined in 33 CFR Part 328.3(a).

Definitions found at 33 CFR Parts 320-323, 325-329, and 331-332 and 40 CFR Part 230 are also applicable to this RGP and are incorporated by reference herein.

FURTHER INFORMATION:

1. Congressional Authorities: This RGP has been issued under Section 404 of the Clean Water Act (33 U.S.C. 1344).

2. District Engineers have the authority to determine if an activity complies with the terms and conditions of this RGP.

3. This RGP does not obviate the need to obtain other Federal, state, or local permits, approvals, or authorizations required by law.

4. This RGP does not grant any property rights or exclusive privileges.

5. This RGP does not authorize any injury to the property or rights of others.

6. This RGP does not authorize interference with any existing or proposed Federal project.

7. Limits of Federal Liability. In issuing this RGP, the Federal Government does not assume any liability for the following:

a. Damages to the permitted project or uses thereof as a result of other permitted or unpermitted activities or from natural causes.

b. Damages to the permitted project or uses thereof as a result of current or future activities undertaken by or on behalf of the United States in the public interest.

c. Damages to persons, property, or to other permitted or unpermitted activities or structures caused by the activity authorized by this permit.

d. Design or construction deficiencies associated with the permitted work.

e. Damage claims associated with any future modification, suspension, or revocation of this permit.

8. Reevaluation of Permit Decision. This office may reevaluate its decision on this RGP at any time the circumstances warrant. Such a reevaluation may result in a determination that it is appropriate to use the suspension, modification, and revocation procedures contained in 33 CFR 325.7.

9. Activities not meeting the terms and conditions of this RGP may be authorized through another type of permit, such as a Nationwide Permit, Letter of Permission, or Standard Permit. The Corps will determine on a case-by-case basis whether an activity has a more than minimal impact, individually or cumulatively, on the aquatic environment or may be contrary to the public interest. The Corps may include additional special conditions to any verification under this RGP to ensure the activity has minimal impact.

CONTACTS AND ADDITIONAL INFORMATION: For additional information about RGP 1, please contact the U.S. Army Corps of Engineers, Sacramento District at the address below, phone number (916) 557-5250.

ATTACHMENTS:

1. *Figure 1a*: General Location of HCP/NCCP Plan Area and Area Covered by RGP
2. *Figure 1b*: HCP/NCCP Plan Area and Area Covered by RGP
3. *Table 1*: Required Ratios and Estimated Preservation, Restoration, and Creation Requirements for Aquatic Land-Cover Types Under Initial and Maximum Urban Development Area
4. *Table 2*: Stream Setback Minimum Requirements for Streams
5. Programmatic Biological Opinion for a Regional General Permit for the East Contra Costa Habitat Conservation Plan/Natural Community Conservation Plan, Contra Costa County, California (USFWS #81420-2011-F-0655, dated April 30, 2012)

This permit becomes effective when the Federal official, designated to act for the Secretary of the Army has signed below.

Michael S. Jewell
Chief, Regulatory Division

6 June 2017
Date

Figure 1a: General Location of HCP/NCCP Plan Area and Area Covered by RGP

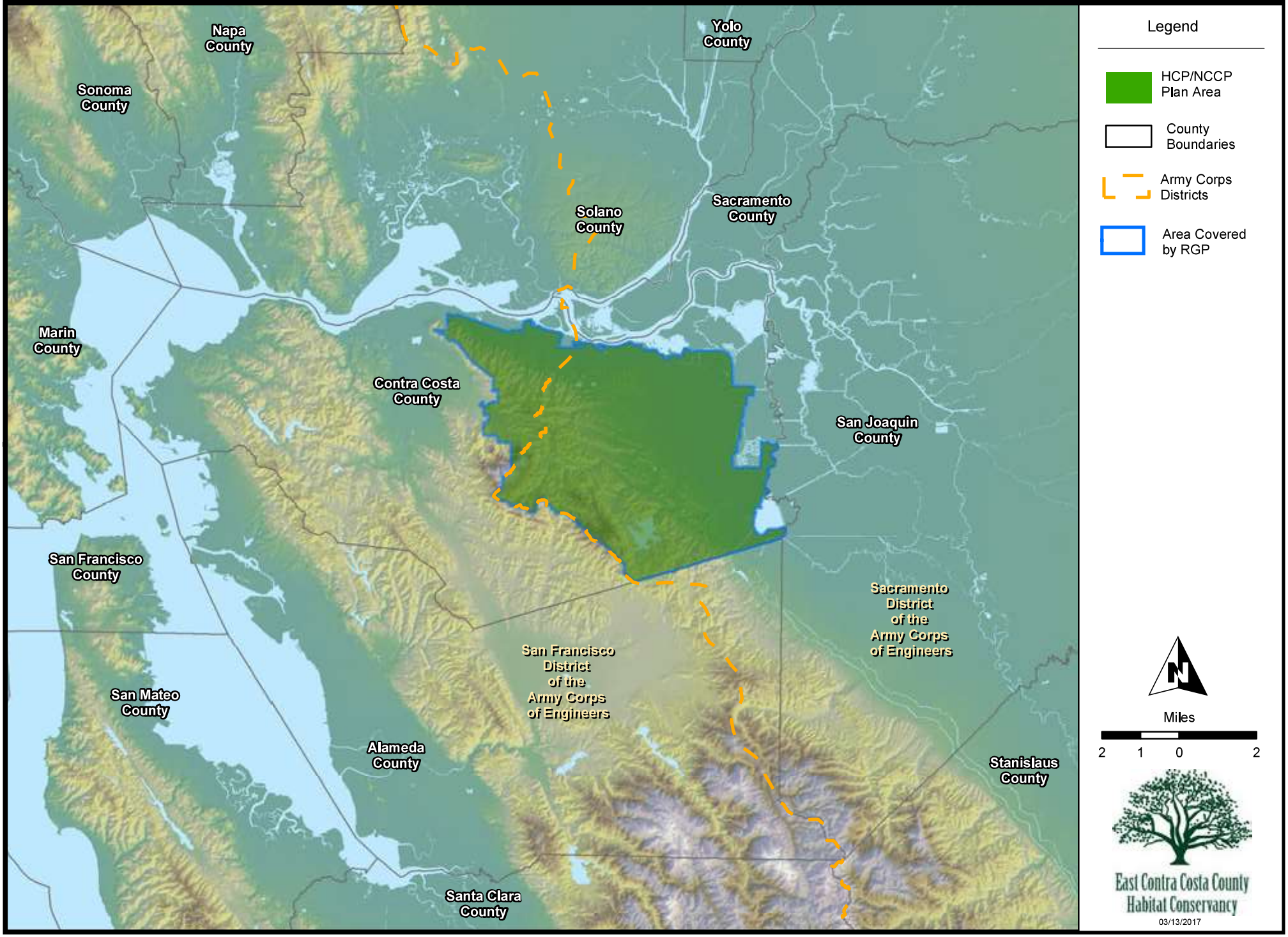

Figure 1b: HCP/NCCP Plan Area and Area Covered by RGP

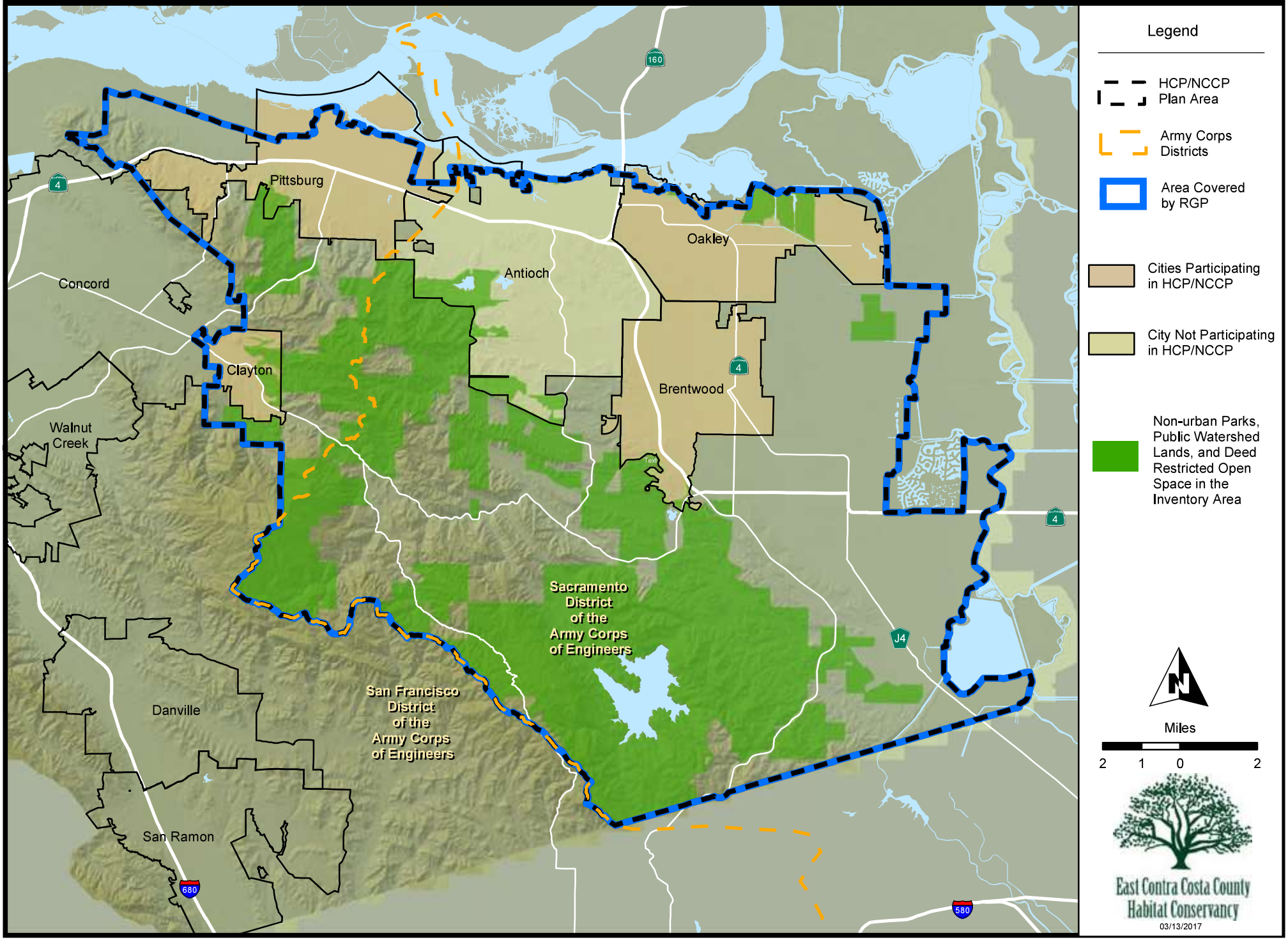

Table 1. Required Ratios and Estimated Preservation, Restoration and Creation Requirements for Aquatic Land-Cover Types under Initial and Maximum Urban Development Area
(Combines tables 5.5a, 5.5b, 5.16 and 5.17 of HCP)

	Preservation Requirements									Restoration & Creation Requirements								
	Required Preservation Ratio	Estimated Impact[1] (acres)		Estimated Preservation Requirement[1] (acres)		Impact & preservation notes	Minimum Available in Acquisition Analysis Zones[2] (acres)		Availabilty notes	Required Restoration and Creation Ratios (in addition to preservation requirements)		Estimated Restoration/ Creation Requirement[1] (acres)		Restoration or Creation Required to Contribute to Recovery (acres)		Estimated Total Restoration or Creation[1] (acres)		restoration / creation notes
Aquatic Land Cover Type		Initial Urban Development Area Scenario	Maximum Urban Development Area Scenario	Initial Urban Development Area Scenario	Maximum Urban Development Area Scenario		Initial Urban Development Area Scenario	Maximum Urban Development Area Scenario		Restoration	Creation	Initial Urban Development Area Scenario	Maximum Urban Development Area Scenario	Initial Urban Development Area Scenario	Maximum Urban Development Area Scenario	Initial Urban Development Area Scenario	Maximum Urban Development Area Scenario	
Riparian woodland/scrub	2:1	30	35	60	70		205	205		1:1	–	30	35	20	20	50	55	
Wetlands and Ponds																		
Perennial wetlands[3]	1:1	74	75	74	75	3	231	232	3	1:1	–	74	75	10	10	84	85	7
Seasonal wetlands	3:1	43	56	129	168	3, 4	172	172	3, 4, 5	2:1	–	86	112	20	20	106	132	4, 7
Alkali wetland	3:1	28	31	84	93	4	168	168	4	2:1	–	56	62	5	5	61	67	4
Ponds	2:1	7	8	14	16		80	80		–	1:1	7	8	8	8	15	16	
Slough/channel	0.5:1	72	72	36	36		137	137		1:1 or riparian	–	72	72	0	0	72	72	9
Aquatic (open water)	1:1	12	12		12		123	123		–	0.5:1 (ponds)	6 (ponds)	6 (ponds)	0	0	6 (ponds)	6 (ponds)	9
Total Aquatic Land Cover Types (acres)	–	266	289	397	470		1,117	1,117				331	370	63	63	394	433	
Perennial streams (miles)	2:1	0.3	0.4	0.6	0.8	6	18	184	6, 7	1:1	1:1 if restoration not feasible	0.3	0.4	0	0	0.3	0.4	7,10
Intermittent streams (miles)	1:1	0.3	0.4	0.3	0.4	6	184	184	6, 7	1:1	1:1 if restoration not feasible	0.3	0.4	0	0	0.3	0.4	7,10
Ephemeral streams (miles)	1:1	4	5	4	5		184	184	7	1:1	1:1 if restoration not feasible	4	5	0	0	4	5	7,10

Notes:

[1] Actual impacts, preservation requirements and restoration/creation requirements will be based on field-delineated resources at impact sites and application of the required preservation ratios in this table.

[2] Many land cover types were underestimated in the mapping conducted for this HCP/NCCP, so these figures represent minimum acreages of what is available for preservation. See Chapter 3 for a discussion of the mapping limitations.

[3] Undetermined wetlands could be seasonal wetlands or perennial wetlands (e.g., freshwater marsh). Seasonal wetlands will be mitigated at a preservation ratio of 3:1; perennial wetlands will be mitigated at a preservation ratio of 1:1. This table assumes 75% of undetermined wetlands are perennial wetlands and 25% are seasonal wetlands.

[4] Seasonal and alkali wetland acreage was quantified as the minimum polygon encompassing clusters of seasonal pools or drainages (i.e., wetland complexes). Impacts and land acquisition requirements will be tracked by jurisdictional wetland boundary, so estimates in this table overstate the expected impacts to and preservation of these land cover types. Impact restrictions and preservation ratios apply only to wetted acres.

[5] The actual amount of seasonal wetlands available for preservation in the inventory area is unknown because of a lack of field surveys. The allowable impact to seasonal wetlands by covered activities will be capped at the amount required to preserve seasonal wetlands at the required 3:1 ratio. For example, if only 30 acres are preserved, allowable impacts will be capped at 10 acres.

[6] Maximum allowable impacts for perennial and intermittent streams could not be separately estimated. Cumulative impacts for these two categories were estimated at 0.6 miles for the Initial Urban Development Area and 0.8 for the Maximum Urban Development Area. For the purposes of this table, it is assumed that the impacts are evenly split between the two categories.

[7] The approximate length of all streams of all types in the Acquisition Analysis Zone is 184 miles.

[8] Undetermined wetlands are either seasonal wetlands or perennial wetlands. Mitigation of seasonal wetlands will be accomplished through restoration at 2:1. Mitigation of perennial wetlands will be accomplished through in-kind creation at 1:1. This table assumes 75% of the undetermined wetlands are perennial wetlands and 25% are seasonal wetlands.

[9] Loss of slough/channel will be compensated by either restoring slough/channel at a 1:1 ratio or restoring riparian woodland/scrub at a 1:1 ratio (see text). These calculations assume all slough/channel impacts will be compensated through riparian woodland/scrub restoration because of the limited opportunities for slough/channel creation. Loss of open water will be compensated by creating ponds (see text).

[10] Streams will be restored at a 1:1 ratio where feasible. Where stream restoration is not feasible, out-of-kind creation of seasonal wetlands or permanent wetlands will be required to replace some of the functions of the lost stream at a 1:1 ratio. See Conservation Measure 2.10 for more details.

Table 2: Stream Setback Minimum Requirements for Streams[4]

Stream Reach Type and Location[1]	Buffer Objective/ Function (from Figure 5-11)	Example Sites in Inventory Area	Minimum Setback (from top of bank measured in aerial perspective[2])	Conditions and Limitations on Impacts To Streams[3]		Conditions and Limitations on Impacts Within Setbacks[4]		Comments
				Linear Limitations on Impacts to Streams	Activities for Which Stream Impacts Will Be Authorized	Limitations on Area of Impacts Within Setback[5]	Activities for Which Setback Impacts Will Be Authorized	
1st and 2nd order[6] ephemeral reaches in urban and agricultural areas	N/A	Multiple unnamed tributaries to intermittent and perennial reaches	Avoidance and minimization measures for drainages must be documented but no setback is required	No limitations	Any activities	No limitations	Any activities	These reaches are located in dense urban and intensive agricultural areas, and provide low habitat function for covered species. Avoidance and implementation of Conservation Measure 1.10 will minimize impacts to water quality and hydrologic functions.
Concrete-lined channels	Enhance water quality; retain restoration potential	Reaches of Kirker Creek	20 ft	No limitations	Any activities	No limitations	Any activities	These reaches are located in dense urban areas and provide low habitat function for covered species. A minimal buffer width will reduce sediment and nutrient inputs from surface flows, retain some potential for stream restoration, and provide for recreational opportunities.
1st and 2nd order[6] ephemeral reaches in natural areas	Erosion and nutrient control;	Multiple unnamed tributaries to intermittent and perennial reaches	25 ft	No limitations	Any activities	No limitations	No limitations, but avoidance and minimization must be documented.	Although ephemeral streams play a limited role in providing habitat to covered species, these systems represent the first point of entry for sediment and other contaminants into downstream reaches. Thus, unlike the stream types below, the primary objective of the setback for

[4] Stream setbacks apply Within the Urban Limit Line or City Limits of Brentwood, Clayton, Oakley or Pittsburg.

Stream Reach Type and Location[1]	Buffer Objective/ Function (from Figure 5-11)	Example Sites in Inventory Area	Minimum Setback (from top of bank measured in aerial perspective[2])	Conditions and Limitations on Impacts To Streams[3]		Conditions and Limitations on Impacts Within Setbacks[4]		Comments
				Linear Limitations on Impacts to Streams	Activities for Which Stream Impacts Will Be Authorized	Limitations on Area of Impacts Within Setback[5]	Activities for Which Setback Impacts Will Be Authorized	
								ephemeral streams is to filter out sediment and contaminants before they degrade downstream habitat.
Perennial, intermittent, or 3rd or higher order[6] ephemeral streams in urban areas except Marsh Creek mainstem	Enhance water quality; retain restoration potential	Lower Willow Creek, Lower Kirker Creek, Lower Sand and Deer Creeks	50 ft	300 feet	Necessary bridges and outfalls	Up to 15% of setback area	Necessary bridges and outfalls, access and maintenance roads for flood control, c3 facilities, and trails	These reaches are located mostly in dense urban areas and provide low habitat function for covered species. However, potential may exist for restoration of riparian vegetation and minimal floodplain areas. In addition, a minimal buffer width will reduce sediment and nutrient inputs from surface flows and provide for recreational opportunities.
Perennial, intermittent, or 3rd or higher order[6] ephemeral streams in agricultural or natural areas and Marsh Creek mainstem	Enhance water quality; retain restoration potential	See examples below[7]	75 ft	300 feet	Necessary bridges and outfalls	Up to 15% of setback area	Necessary bridges and outfalls, access and maintenance roads for flood control, trails, and other necessary facilities approved by wetlands agencies	These reaches retain the greatest habitat value and potential for restoration within the Urban Limit Line. The buffer will filter sediment and other contaminants, maintain habitat for covered species, allow for restoration of riparian vegetation and some small floodplain areas, as well as providing recreation opportunities.

[1] Location parameters (e.g., "agricultural areas", "natural areas", etc.) describe the setting of the stream at the time of completing this HCP/NCCP and refer to the fee zones and urban landcover shown in Figure 9-1.
[2] Where native woody riparian vegetation is present, minimum setbacks must extend to the outer dripline of the riparian vegetation or the specified number of feet measured from top of bank, whichever is greatest. Riparian vegetation is defined broadly to include oaks and other woody species that function as riparian

corridors. Setbacks must also meet minimum setback requirements of the applicable local land use agency. Contra Costa County has an ordinance regulating impacts near unimproved earthen channels. This Ordinance requires a "structure setback line" that varies between approximately 30 feet and 50 feet from top of bank depending on the height of top of bank above the channel invert (County Code Title 9, Division 914-14.012).

[3] Mitigation is required for all impacts to streams, as described in Chapter 5 of the HCP/NCCP. Restoration requirements are summarized in Tables 5-16, 5-17, and 9-5. Preservation requirements are summarized in Tables 5-5a and 5-5b and may be accomplished through payment of the development fee described in Section 9.3.1 or through provision of land in lieu of fees.

[4] Impacts within setbacks must be mitigated through: a) payment of the development fee described in Section 9.3.1 over the entire property including the setback and the stream channel; and b) through payment of the riparian impact fee (see Table 9-5 of HCP/NCCP) for every acre of impact within the setback or through direct performance of riparian restoration at a 0.5 to 1 ratio on-site or off-site.

[5] Restrictions will be measured as a percentage of the setback area excluding the area the of the stream channel.

[6] Stream order refers to the numeric identification of the links within a stream network. This document follows the stream ordering system of Strahler (1964). In this system, a first order stream is a stream with an identifiable bed and bank, without any tributary streams. A second order stream is formed by the confluence of two first order streams. A third order stream is formed by the confluence of two second order streams, and so on. Addition of a lesser order stream does not change the stream order of the trunk stream.

[7]Perennial streams in agricultural or natural areas within the Inventory Area consist of the following:

a. **Mount Diablo Creek, Russelman Creek, Peacock Creek upstream of the Oakhurst Country Club property, and tributaries to Mount Diablo Creek within Mount Diablo State Park;**

b. **Kellogg Creek in the Foothills/Upper Valley and Delta geomorphic zones;**

c. **Brushy Creek in the Delta and Lower Valley/Plain geomorphic zones;**

d. **Indian, Rock, Sand Mound, Dutch, Piper, and Taylor Sloughs, and False River (does not include reaches in concrete channels); and**

e. **Sand Creek and Oil Canyon Creek in the Montane geomorphic zone.**

United States Department of the Interior

FISH AND WILDLIFE SERVICE
Sacramento Fish and Wildlife Office
2800 Cottage Way, Room W-2605
Sacramento, California95825-1846

In Reply Refer To:
81420-2011-F-0655

APR 3 0 2012

Kathleen A. Dadey
Chief, California Delta Branch
Attn: Mary Pakenham-Walsh
Regulatory Division
U.S. Army Corps of Engineers
650 Capitol Mall, Suite 5-200
Sacramento, California 95814

Subject: Programmatic Biological Opinion for a Regional General Permit for the East Contra Costa Habitat Conservation Plan/Natural Community Conservation Plan, Contra Costa County, California (Corps file number SPK-2001-00147)

Dear Ms. Dadey:

This programmatic Biological Opinion has been prepared in response to the U.S. Army Corps of Engineers' (Corps) June 14, 2011, request for section 7 consultation with the U.S. Fish and Wildlife Service (Service) for multiple activities that would be authorized under a Corps Regional General Permit (RGP) within the permit area for the (Plan Area) for the East Contra Costa Habitat Conservation Plan/Natural Community Conservation Plan (HCP/NCCP). At issue are the effects of this action on the threatened California red-legged frog (*Rana draytonii*), threatened Central California Distinct Population Segment (DPS) of the California tiger salamander (*Ambystoma californiense*) (Central California tiger salamander), threatened Alameda whipsnake (*Masticophis laterals euryxanthus*), threatened giant garter snake (*Thamnophis gigas)* endangered San Joaquin kit fox (*Vulpes macrotis mutica*), threatened vernal pool fairy shrimp (*Branchinecta lynchi)* and its critical habitat, the endangered longhorn fairy shrimp (*Branchinecta longiantenna*) and its critical habitat, and the endangered vernal pool tadpole shrimp (*Lepidurus packardi*). This programmatic Biological Opinion is issued under the authority of the Endangered Species Act, as amended (16 U.S.C. 1531 *et seq.*) (Act or ESA).

This document is based on: (1) the draft *Department of the Army Permit Regional General Permit Number 1 – Minimal Impact Activities-East Contra Costa County, California* dated June 14, 2011; (2) a public notice for the proposed issuance of a Regional General Permit (SPK-2001-00147) for activities covered under the HCP/NCCP dated February 2011; (3) a public notice for the proposed in-lieu fee program in conjunction with the HCP/NCCP (SPK-2001-00147) dated January 2011; (4) the final *East Contra Costa Habitat Conservation Plan/Natural Community Conservation Plan* dated October 2006; (5) *Exhibit B: Corrections and Updates to the*

HCP/NCCP dated December 2006; (6) the *Intra-Service Biological Opinion on Issuance of a Section 10(a)(1)(B) Incidental Take Permit for the HCP/NCCP* (Intra-Service Opinion) dated July 2007;(7) the draft *Aquatic Resources Inventory, Classification, and Function* for the HCP/NCCP dated October 2004; (8) the *East Contra Costa Habitat Conservation Plan/Natural Community Conservation Plan Annual Report 2010* dated March 2011; and (9) and other information available to the Service.

Consultation History:

June 14, 2011:	The Service received the Corps letter requesting initiation of formal consultation for the proposed action.
June 22, 2011:	The Service attended an informational workshop for the public hosted by the East Contra Costa HCP/NCCP with the Corps and the California Department of Fish and Game (CDFG) to discuss the proposed action.
March 1, 2012:	The Service received a revised RGP.

BIOLOGICAL OPINION

Description of the proposed action

The HCP/NCCP addresses effects to both federally listed and unlisted species. However, pursuant to section 7 of the Act, this Biological Opinion only addresses effects to federally listed or proposed threatened and endangered species resulting from the proposed issuance of a RGP that would authorize placement of dredged or fill materials into waters of the U.S. for activities covered under the HCP/NCCP within the Plan Area for the HCP/NCCP. For a complete description of all *Covered Activities* (Covered Activities) under the HCP/NCCP, see Chapter 2 of the HCP/NCCP (Jones and Stokes 2006).

The proposed RGP is valid for five years from the date of issuance (or reissuance), but can be extended or reissued (see *Terms of Authorization: Expiration of RGP* below); however, the HCP/NCCP and Intra-Service Opinion cover activities for a period of thirty years (expires on July 25. 2037). Because activities proposed under the RGP are a subset of the Covered Activities analyzed in the HCP/NCCP and Intra-Service Opinion, the Service will consider this Biological Opinion valid for the life of the HCP/NCCP's Incidental Take Permit (TE160958-0) (Service 2007), unless new information reveals effects of the proposed action may result in adverse effects to federally listed species in a manner not identified to date, or if a new species is listed that may be affected by the proposed action.

Project Overview

The proposed action is issuance of a RGP that would authorize placement of dredged or fill material into waters of the U.S. within the Plan Area, pursuant to section 404 of the Clean Water Act (CWA), for Covered Activities as defined in the HCP/NCCP that would have minimal individual and cumulative impacts on the aquatic environment. The RGP's procedures and associated requirements would integrate with those contained in the HCP/NCCP, resulting in consistent implementation of the section 10 permit for the HCP/NCCP and a coordinated permitting process under section 404 of the CWA.

The proposed RGP would authorize specific categories of activities with minimal individual and cumulative impacts on the aquatic environment that meet the terms and conditions of the RGP. Temporary structures, fills, and work necessary to construct an activity authorized by the RGP are allowed, provided such work complies with the terms and conditions of the RGP inclusive of special conditions that the Corps may add. The RGP applies only to HCP/NCCP Covered Activities, as set forth in Section 2.3 of the HCP/NCCP (Jones and Stokes 2006). Any question as to whether a proposed activity is considered a Covered Activity under the HCP/NCCP shall be subject to confirmation by the East Contra Costa County Habitat Conservancy, a joint exercise of powers agency formed by the Cities of Brentwood, Clayton, Oakley and Pittsburg and Contra Costa County to perform the role of Implementing Entity for the HCP/NCCP (Conservancy). The HCP/NCCP Covered Activities are divided among the following Activity categories in the RGP for purposes of assigning Activity-specific conditions (see *Activity Specific Conditions* below):

1. Residential, commercial, industrial, institutional, and other urban developments and associated infrastructure inside the Urban Limit Line of Contra Costa County or inside the City Limits of the Cities of Brentwood, Clayton, Oakley and Pittsburg, including but not limited to roads, utilities, parks, storm water management facilities, and water supply and delivery facilities (activity-specific conditions: 1 through 4).

2. Recreation projects, including parks, picnic areas, staging areas, trails and park maintenance facilities. Applies only to the activities set forth in Sections 2.3.2 and 2.3.4 of the HCP/NCCP (activity-specific conditions: 1 through 4).

3. Flood control detention basins, reservoirs, channels, and related facilities. Applies only to the specific planned facilities set forth in Section 2.3.2 of the HCP/NCCP (activity-specific conditions: 1 through 4).

4. Transportation projects, including road construction and widening, bicycle trails, rail projects, bridges and safety-related projects. Applies only to the specific planned facilities set forth in Section 2.3.2 of the HCP/NCCP (general conditions apply only).

5. Wetland and stream restoration, creation, enhancement and management. Applies only to activities set forth in Sections 2.3.2 and 2.3.4 of the HCP/NCCP (activity-specific conditions: 1, 2, and 4).

6. Utility projects, including electrical transmission projects, cellular communication projects and pipelines. Applies only to the activities set forth in Sections 2.3.2 and 2.3.4 of the HCP/NCCP (activity-specific condition 4).

7. Maintenance, repair, rehabilitation or replacement of any previously authorized (under the RGP or other Corps permit), currently serviceable, structure or fill. Applies only to the maintenance activities set forth in Sections 2.3.1 and 2.3.3 of the HCP/NCCP (general conditions apply only).

If there is any question as to which Activity category a proposed activity would apply to, the Corps will determine the applicable Activity category. The RGP does not cover any activities in waters of the U.S. conducted in emergency situations.

Terms of Authorization:

1. Applying for RGP authorization: Prior to commencing a proposed activity, applicants seeking authorization under the RGP shall notify the Corps in accordance with RGP general condition number 19 (Notification) listed in the general conditions below. If the Corps determines that an activity is not an eligible activity under the RGP, it will notify the applicant in writing within 30 calendar days and provide instructions on the procedures to seek authorization under a standard permit, letter of permission or Nationwide permit. If the Corps determines that a proposed activity is eligible for coverage under the RGP, it will notify the applicant within 45 calendar days of receipt of a complete application. If the Corps does not provide a written response to the applicant within 45 calendar days following receipt of a complete application, the applicant may presume the proposed activity is an eligible activity that may be covered under the RGP, provided the activity complies with all other terms and conditions of the RGP.

2. Impact Thresholds for waters of the U.S.: Impacts to waters of the U.S. shall be avoided and minimized to the maximum extent practicable. The loss of waters of the U.S. (including wetlands) resulting from individual project impacts may not exceed a total of 1.5 acres or more than 300 linear feet of perennial, intermittent or 3rd or higher order ephemeral streams (as defined in Table 2 of the RGP and further described in the HCP/NCCP), unless the linear limit is waived in writing by the Corps. Additional restrictions are listed in the General and Activity-Specific Conditions.

3. Single and complete project: The project must be a single and complete project. For example, if construction of a residential development involves phases, the sum of all impacted areas would be the basis for deciding whether or not the project will be covered by the RGP.

4. After-the-fact projects: The RGP may not be used to authorize activities after they have impacted waters of the U.S.

5. Compliance with HCP/NCCP Conditions: Activities to be authorized under the RGP must be HCP/NCCP Covered Activities and must fully comply with the HCP/NCCP. Compliance with the HCP/NCCP requires applicants to implement the appropriate conservation measures outlined in Chapter 6 of the HCP/NCCP.

6. Special conditions: The Corps may add special conditions to an authorization to ensure the activity complies with the terms and conditions of the RGP, and/or that adverse impacts on the aquatic environment or other aspects of the public interest are individually and cumulatively minimal.

7. Activity completion: Any activity authorized by the Corps under the RGP must be completed within three (3) years of the date it is authorized. The "authorization date" is the date the Corps verifies in writing that the activity meets the terms and conditions of the RGP. The Corps will, on a case-by-case basis, review requests for time extensions if the permittee fails to complete the activity within three years. A time extension would be considered a reverification and would be subject to review and approval policies in effect at the time of review. Pursuant to term #9, below, activities authorized under the RGP that are under construction or under contract for construction in reliance upon this authorization will remain authorized provided the activity is completed within 12 months of the date of the RGP's expiration, modification or revocation, unless the Corps exercises its discretionary authority to modify, suspend, or revoke the authorization of a specific project.

8. Discretionary Authority: The Corps has the discretion to suspend, modify, or revoke authorizations under the RGP. This discretionary authority may be used by the Corps to also further condition or restrict the applicability of the RGP for cases in which it has concerns associated with the Clean Water Act Section 404(b)(1) Guidelines, or regarding any public interest factor. Should the Corps determine that a proposed activity may have more than minimal individual or cumulative adverse impacts to aquatic resources or otherwise be contrary to the public interest, the Corps will modify the authorization to reduce or eliminate those adverse effects, or notify the applicant that the proposed activity is not authorized by the RGP and provide instructions on how to seek authorization under an individual permit. The Corps may restore authorization under the RGP at any time it determines that the reason for asserting discretionary authority has been resolved or satisfied by a condition, project modification, or new information. The Corps may also use its discretionary authority to modify, suspend, or revoke the RGP at any time.

9. Expiration of RGP: The RGP is valid for five years from the date of issuance (or reissuance). At least 60 calendar days prior to the expiration date of the RGP, the Corps will issue a public notice, with an opportunity for public comment, describing the reasons for reissuing the RGP, reissuing the RGP with modifications, or not reissuing the RGP for another five years. The Corps may extend the RGP for six months beyond the expiration date if it is

unable to reissue the RGP due to unresolved issues. If the Corps has not reissued or extended the RGP by the expiration date, the RGP will no longer be valid. The RGP may also be modified, suspended, or revoked by the Corps at any time deemed necessary. In such instance, the Corps will issue a public notice concerning the action.

General Conditions:

The following conditions apply to all Activity categories:

1. Threatened and Endangered Species: No activity is authorized under the RGP that does not comply with the mandatory terms and conditions of the Service's Section 10(a)(1)(B) Incidental Take Permit for the East Contra Costa HCP/NCCP dated July 20, 2007 (Service permit number: TE160958-0). This Biological Opinion contains mandatory terms and conditions to implement the reasonable and prudent measures that are associated with "incidental take" authorization under the RGP. Authorization under the RGP is conditional upon compliance with all of the mandatory terms and conditions of this Biological Opinion. Failure to comply with the terms and conditions of this Biological Opinion would constitute non-compliance with the RGP. The Service is the appropriate authority to determine compliance with the terms and conditions of the Biological Opinion, and with the ESA. The permittee must comply with all applicable conditions of this Biological Opinion, including those ascribed to the Corps.

2. Water Quality Certification: Section 401 Water Quality Certification is required for activities to be authorized by the RGP. The Corps may require additional water quality management measures to ensure that the authorized activity does not result in more than minimal impacts, individually or cumulatively.

3. Historic Properties: No activity is authorized under the RGP if the activity may affect historic properties listed, or eligible for listing, in the National Register of Historic Places, until the requirements of Section 106 of the National Historic Preservation Act (NHPA), as amended, have been satisfied. Applicants must notify the Corps if the activity may have the potential to cause effects to any historic properties listed, determined to be eligible for listing on, or potentially eligible for listing on the National Register of Historic Places, including previously unidentified historic properties. The Corps will consult with the State Historic Preservation Officer (SHPO), as appropriate, following the policy and procedural standards of 33 CFR Part 325 Appendix C[1].

4. Unanticipated Cultural Resources Discoveries: If previously unidentified cultural materials are unearthed during construction, all work shall be halted until a qualified archaeologist can examine the deposit and determine its nature and significance. In the event of discovery of possible human remains, state law requires that the County Coroner be contacted.

[1] Inclusive of Appendix C Interim Guidance dated April 25, 2005 and January 31, 2007, or such guidance that is applicable at the time that a permit application is submitted. Current guidance may be found on the Sacramento District's web site at: http://www.spk.usace.army.mil/organizations/cespk-co/regulatory/.

5. Fills within 100-Year Floodplains: The activity must comply with applicable FEMA-approved state or local floodplain management requirements.

6. Bed and Bank Stabilization: Bank stabilization activities are limited to: (a) using the minimum amount of material needed for erosion protection; (b) no more than 500 feet in length along the bank, unless this criterion is waived in writing by the Corps; and (c) no more than an average of 1 cubic yard of material per running foot placed along the bank below the plane of the ordinary high water mark or high tide line, unless this criterion is waived in writing by the Corps.

7. Best Management Practices: Best Management Practices (BMPs) must be employed during construction and in project design to protect water quality and minimize impacts of stormwater runoff on aquatic resources. BMPs should be appropriately located in or adjacent to waters of the U.S. (e.g., silt curtains). The applicant shall employ the following BMPs, as appropriate and feasible, in designing and constructing the project. The applicant shall describe which BMPs are practicable as part of the notification procedure as per general condition #19, subpart (b) below:

   a. Preservation of natural resource features on the project site (e.g., floodplains, wetlands, streams, and other drainage ways, grasslands, woodlands, and native soils);
   b. Preservation of natural water infiltration and storage characteristics of the site;
   c. Minimization of new impervious surfaces in project design (impervious surfaces may be minimized through practices such as reducing road widths and clustering developments designed around open space);
   d. Structural measures that provide water quality and quantity control;
   e. Structural measures that provide only quantity control and conveyance;
   f. Construction BMPs;
   g. Low impact development (LID) BMPs.

   Examples of structural BMPs include: vegetated natural buffers, grassed swales, infiltration trenches, level spreaders and channel grade controls. Examples of construction BMPs include: matting and filter fencing, or other barrier methods to intercept/capture sediment.

8. Proper Maintenance: Any authorized structure or fill shall be properly maintained, including maintenance necessary to ensure public safety and the movement of aquatic organisms.

9. Aquatic Life Movements: No activity may substantially disrupt the necessary life cycle movement of aquatic species indigenous to the water body, including those species that normally migrate through the area, unless the activity's primary purpose is to impound water. Culverts placed in streams must be installed to maintain low-flow conditions. If feasible, they should be designed as open-bottom culverts.

10. Equipment: Heavy equipment working in wetlands must be placed on mats, or other measures, such as low-ground pressure equipment, must be taken to minimize soil disturbance.

11. Tribal Rights: No activity or its operation may impair reserved tribal rights, including, but not limited to, reserved water rights and treaty fishing and hunting rights.

12. Water Supply Intakes: No discharge of dredged or fill material may occur in the proximity of a public water supply intake, except where the discharge is for the repair or improvement of the intake structure(s), and/or adjacent bank stabilization.

13. Suitable Material: No discharge of dredged or fill material may consist of unsuitable material and material discharged must be free from toxic pollutants in toxic amounts (section 307 of the CWA). Unsuitable material includes, but is not limited to, trash, debris, car bodies, and asphalt.

14. Management of Water Flows: To the maximum extent practicable, the pre-construction course, condition, capacity, and location of open waters must be maintained. The activity must be constructed to withstand expected high flows. The activity must not restrict or impede the passage of normal or high flows, unless the primary purpose of the activity is to impound water or manage high flows. The activity may alter the pre-construction course, condition, capacity, and location of open waters if it benefits the aquatic environment (e.g., stream restoration project).

15. Migratory Bird Breeding Areas: Activities in waters of the U.S. that serve as breeding areas for migratory birds shall be avoided to the maximum extent practicable.

16. Removal of Temporary Fills and Restoration of Affected Areas: Temporary fills shall be removed in their entirety and the affected areas returned to pre-construction elevations. The affected areas shall be revegetated with native vegetation upon completion of the project. A restoration plan, which includes a 1-foot contour topographic map, must be submitted with the notification to the Corps.

17. Compensatory Mitigation: Mitigation for impacts to waters of the U.S. must be accomplished by conforming to the minimum mitigation ratios set by the HCP/NCCP. Mitigation proposals are required to be consistent with the Corps' mitigation rule (33 CFR Part 332).

    a. Mitigation may be accomplished by one or more of the following mechanisms: 1) payment of the aquatic resources mitigation fee to the Conservancy in accordance with the in-lieu fee (ILF) program envisioned to be established by the Conservancy; 2) purchasing credits from a Corps-approved mitigation bank that also provides mitigation acceptable under the HCP/NCCP, and/or; 3) through a "permittee-responsible" mitigation project (33 CFR Part 332).

b. Prior to proceeding with the activity authorized by the RGP, a final mitigation plan must be approved by the Corps and the Conservancy, and/or mitigation fees must be paid. When mitigation fees are applicable, evidence of fee payment must be provided to the Corps before commencement of the activity authorized by the RGP can be initiated.
c. If the RGP verification includes permittee-responsible compensatory mitigation, the mitigation plan must contain a reporting procedure consistent with the Corps' mitigation rule (33 CFR Part 332.4[c][10]), *Monitoring Requirements*.

18. Notification: The applicant shall provide written notification (i.e., a complete application) for a proposed activity to be authorized under the RGP prior to commencing the activity. The Corps' receipt of the complete application is the date when the Corps receives all required notification information from the applicant (see below). Written notification shall include all of the following:

a. A letter signed by the applicant requesting authorization under the RGP, identifying the Activity Category(s), a description of the proposed activity, the location of the activity (with latitude and longitude), and the area (in acres, and/or linear feet as applicable) of waters of the U.S., including wetlands, to be impacted;
b. For each general and applicable activity-specific condition of the RGP, a brief narrative describing how the activity would comply with the condition, or that the condition does not apply;
c. Vicinity and project site maps;
d. A delineation of waters of the U.S., including wetlands, for the project site and for areas immediately adjacent to the project site. On-site wetlands must be delineated using the Corps Wetlands Delineation Manual (1987) and Arid West Region Regional Supplement (2008), or most recent manual(s) in effect at the time of the applicant's proposal. Off-site wetlands may be identified through the use of reference materials including local wetland inventories, soil surveys, and aerial photography. The delineation shall *also* include information on wetlands and waters, as defined in the HCP/NCCP, that are/may not be waters of the U.S.;
e. Preliminary plans (on 8 ½" x 11" or 14" reduced-sized drawings) showing all aspects of the proposed activity and the location of avoided and impacted waters of the U.S. Plan-view and cross-section plans shall be included. Both temporary (e.g., access, staging) and permanent impacts to waters of the U.S. shall be shown. The plans shall include grading contours and existing and proposed structures, such as buildings, roadways, stormwater management facilities, utilities, construction access areas and water conveyance structures. The drawings shall also show buffer areas, open space designations, locations of BMPs, deed restricted areas, and restoration areas, if required;
f. A written statement explaining how the activity has been designed to avoid and minimize adverse effects, both temporary and permanent, to waters of the U.S. For compensatory mitigation proposed in accordance with general condition #18, submit a preliminary plan to offset unavoidable impacts to waters of the U.S.;

g. A cultural resource survey report for the project site, including all staging, access and construction areas. The report must be prepared in accordance with the Sacramento District's Guidelines for Compliance with Section 106 of the NHPA (dated February 25, 2011), or more recent guidance (if applicable) at the time a permit application is submitted.

If the Corps determines that the activity complies with the terms and conditions of the RGP, including confirmation that proposed impacts to aquatic resources are minimal, the Corps will notify the applicant in writing and include any special conditions deemed necessary. If the Corps determines the impacts of the proposed activity are more than minimal, the Corps will notify the applicant that the project does not qualify for authorization under the RGP and instruct the applicant on the procedures to seek authorization under an individual permit.

19. Reporting Responsibilities: The permittee must submit a report to the Corps within 30 days of project completion. The report will contain the following:

    a. The Corps' file number;
    b. Photographs showing pre- and post-construction project conditions;
    c. A completed compliance certification.

20. Access: The permittee must allow representatives from the Corps to inspect the authorized activity at any time deemed necessary to ensure that it is being or has been accomplished in accordance with the terms and conditions of the permit.

21. Transfer of RGP Authorization: If the permittee sells the property associated with this permit, the permittee must obtain the signature and mailing address of the new owner on the permit verification letter, and forward a copy to this office to validate the transfer.

Activity-Specific Conditions:

The following conditions apply to Activity categories specified at the end of each condition.

1. Stream Setbacks. Consistent with the requirements of the HCP/NCCP, stream setbacks shall be established (see the HCP/NCCP for detailed stream setback requirements). Waters of the U.S. shall not be filled in order to meet the buffer requirements (Activity categories 1, 2, 3, and 5).

2. Permanent Protections. All preserved, created, restored or enhanced waters of the U.S. and adjacent buffers on the project site shall be preserved and permanently protected through a deed restriction, conservation easement, or other appropriate real estate or legal instrument, consistent with the requirements of the HCP/NCCP as determined by the Corps. A recorded copy of the real estate instrument must be provided to the Corps prior to proceeding with any activity otherwise authorized by the RGP (Activity categories 1, 2, 3, and 5).

3. Fencing and Signage. Preserved areas on the project site must be fenced and signed as sensitive areas to discourage human disturbance (Activity categories 1, 2, and 3).

4. Utility Lines. All utility lines shall be constructed in accordance with the following:
   a. The construction area for linear utility line projects shall be limited to a width of 75 feet, unless this limit is waived in writing by the Corps.
   b. For utility line projects, directional drilling, clear span or other techniques that do not contact the waterbody shall be used if the waterbody contains perennial flow.
   c. If the project involves the use of directional drilling below waters, notification shall include a contingency plan. The plan will include actions that will be taken to stabilize the work area and avoidance/contingency measures in the event of a potential "frac-out."
   d. Material resulting from trench excavation may be temporarily sidecast (up to 60 days) into waters of the U.S., provided that the material is not placed in such a manner that it is dispersed by currents or other forces. The Corps may extend the period of temporary side casting for no more than a total of 180 days, where appropriate.
   e. Utility lines must not adversely alter existing hydrology, including draining of wetlands. In wetland areas, utility line trenches shall be lined with clay, or other impermeable materials or structures (such as cut-off walls) to ensure that the trench through which the utility line is installed does not drain waters of the U.S. In addition, to prevent a French drain effect, gravel cannot be used as backfill material in the top 10 feet of the trench.
   f. In wetland areas, the top 6"-12" of the trench shall be backfilled with topsoil excavated from the trench in the same stratification in which it was removed.
   g. Excess material shall be removed to upland areas immediately upon completion of utility line construction in any segment of the project containing waters of the U.S. In no case shall the excess material be left in place until the entire utility line is completed.
   h. The construction area, including unprotected slopes and streambanks, shall be stabilized (e.g., blanketed and seeded) immediately upon completion of the utility line construction in any segment of the project. In no case shall soil stabilization be delayed until the entire utility line is completed.
   i. Temporarily disturbed construction areas must be restored to pre-construction conditions, including grading to original contours and revegetating (with native vegetation or other appropriate vegetation approved by the Corps) immediately upon completion of the project. A restoration plan, which includes a 1-foot contour topographic map, shall be submitted with notification (Activity categories 1, 2, 3, 5, and 6).

Limitations and Restrictions:

1. The Corps has authority to determine if an activity complies with the terms and conditions of the RGP.

2. The RGP does not obviate the need to obtain other Federal, state, or local permits, approvals, or authorizations required by law.

3. The RGP does not grant any property rights or exclusive privileges.

4. The RGP does not authorize any injury to the property or rights of others.

5. The RGP does not authorize interference with any existing or proposed Federal project.

Definitions:

This Biological Opinion incorporates by reference the Definitions contained within the RGP.

Action Area

The area covered by the RGP is geographically synonymous with the Plan Area for the HCP/NCCP in east Contra Costa County, including the cities of Clayton, Brentwood, Oakley, and Pittsburg, and specific areas of unincorporated Contra Costa County. The HCP/NCCP action area is within eastern Contra Costa County, California. The action area covers 174,018 acres, or approximately one-third of Contra Costa County, and is entirely within the eastern portion of the County. The action area is approximately bounded on the south by the Alameda–Contra Costa County line; on the east by the westernmost Delta sloughs between Oakley and the Alameda–Contra Costa County line; on the north by the San Joaquin River shoreline; and on the southwest and west by the western edges of the watersheds of Kellogg and Marsh Creeks, the Mount Diablo Meridian, and the Clayton sphere of influence.

The action area encompasses all or most of five incorporated cities: Brentwood, Clayton, Oakley, Pittsburg, and Antioch; however, Antioch is not a Permittee to the HCP/NCCP. Three-quarters of the land in the action area, approximately 128,908 acres, are in unincorporated areas of Contra Costa County. For a more detailed description of the action area refer to the Intra-Service Opinion.

Analytical Framework for the Jeopardy Analysis

Jeopardy Determination

In accordance with policy and regulation, the jeopardy analysis in this Biological Opinion relies on three components: (1) the *Status of the Species*, which evaluates the California red-legged frog, Central California tiger salamander, Alameda whipsnake, giant garter snake, San Joaquin kit fox, vernal pool fairy shrimp, longhorn fairy shrimp, and vernal pool tadpole shrimp, the factors responsible for that condition, and their survival and recovery needs; (2) the *Environmental Baseline* and evaluates the condition of these listed species in the action area, the factors responsible for that condition, and the relationship of the action area to the survival and recovery of these listed species; (3) the *Effects of the Action*, which determines the direct and indirect effects of the proposed Federal action and the effects of any interrelated or interdependent activities on these species; and (4) *Cumulative Effects*, which evaluates the effects of future, non-Federal activities in the action area on them.

In accordance with policy and regulation, the jeopardy determination is made by evaluating the effects of the proposed Federal action in the context of the California red-legged frog, Central California tiger salamander, Alameda whipsnake, giant garter snake, San Joaquin kit fox, vernal pool fairy shrimp, longhorn fairy shrimp, and vernal pool tadpole shrimp's current status, taking into account any cumulative effects, to determine if implementation of the proposed action is likely to cause an appreciable reduction in the likelihood of both the survival and recovery of these listed species in the wild.

The jeopardy analysis in this Biological Opinion places an emphasis on consideration of the range-wide survival and recovery needs of these listed species, and the role of the action area in the survival and recovery of these listed species as the context for evaluating the significance of the effects of the proposed Federal action, taken together with cumulative effects, for purposes of making the jeopardy determination.

Adverse Modification Determination

This Biological Opinion does not rely on the regulatory definition of "destruction or adverse modification" of critical habitat at 50 CFR 402.02. Instead, we have relied upon the statutory provisions of the ESA to complete the following analysis with respect to critical habitat.

In accordance with policy and regulation, the adverse modification analysis in this Biological Opinion relies on four components: (1) the *Status of Critical Habitat*, which evaluates the range wide condition of designated critical habitat for vernal pool tadpole shrimp and longhorn fairy shrimp in terms of primary constituent elements (PCEs), the factors responsible for that condition, and the intended recovery function of the critical habitat at the provincial and range-wide scale; (2) the *Environmental Baseline*, which evaluates the condition of the critical habitat in the action area, the factors responsible for that condition, and the recovery role of the critical habitat in the action area; (3) the *Effects of the Action*, which determines the direct and indirect impacts of the proposed Federal action and the effects of any interrelated or interdependent activities on the PCEs and how that will influence the recovery role of affected critical habitat units; and (4) *Cumulative Effects* which evaluates the effects of future, non-Federal activities in the action area on the PCEs and how that will influence the recovery role of affected critical habitat units.

For purposes of the adverse modification determination, the effects of the proposed Federal action on vernal pool fairy shrimp and longhorn fairy shrimp critical habitat are evaluated in the context of the range-wide condition of the critical habitat at the provincial and range-wide scales, taking into account any cumulative effects, to determine if the critical habitat range-wide would remain functional(or would retain the current ability for the PCEs to be functionally established in areas of currently unsuitable but capable habitat) to serve its intended recovery role for the vernal pool fairy shrimp and longhorn fairy shrimp.

The analysis in this Biological Opinion places an emphasis on using the intended range-wide recovery function of vernal pool fairy shrimp and longhorn fairy shrimp critical habitat and the role of the action area relative to that intended function as the context for evaluating the significance of the effects of the proposed Federal action, taken together with cumulative effects, for purposes of making the adverse modification determination.

Status of the Species

California red-legged frog

Listing Status: The California red-legged frog was listed as a threatened species on May 23, 1996 (Service 1996). Critical habitat was designated for this species on April 13, 2006 (Service 2006) and revisions to the critical habitat designation were published on March 17, 2010 (Service 2010). At this time, the Service recognized the taxonomic change from *Rana aurora draytonii* to *Rana draytonii* (Shaffer *et al.* 2010). A recovery plan was published for the California red-legged frog on September12, 2002 (Service 2002a).

Status of the Species: In a study of California red-legged frog terrestrial activity in a xeric environment in eastern Contra Costa County, Tatarian (2008) noted that a 57 percent majority of frogs fitted with radio transmitters in the Round Valley study area stayed at their breeding pools, whereas 43 percent moved into adjacent upland habitat or to other aquatic sites. Her study reported a peak seasonal terrestrial movement occurring in the fall months associated with the first 0.2-inch of precipitation and tapering off into spring. Upland movement activities ranged from 3 to 233 feet, averaging 80 feet, and were associated with a variety of refugia including grass thatch, crevices, cow hoof prints, ground squirrel burrows at the base of trees or rocks, logs, and under man-made structures; others were associated with upland sites lacking refugia (Tatarian 2008). The majority of terrestrial movements lasted from 1 to 4 days; however, one adult female was reported to remain in upland habitat for 50 days (Tatarian 2008). Upland refugia closer to aquatic sites were used more often and were more commonly associated with areas exhibiting higher object cover, e.g., woody debris, rocks, and vegetative cover. Subterranean cover was not significantly different between occupied upland habitat and non-occupied upland habitat.

With the exception of the information provided above, the Service has determined that the Status of the Species is substantively unchanged from the time the Service issued its Intra-Service Opinion for the HCP/NCCP. Therefore, the Service is incorporating by reference the Status of the Species from that opinion. For additional information regarding the Status of the Species, including description, distribution, status and natural history, and threats, refer to the Intra-Service Opinion for the HCP/NCCP.

Central California Tiger Salamander

Listing Status: The Service proposed to list the Central California tiger salamander as threatened on May 23, 2003. At this time reclassification of the Santa Barbara County and Sonoma County

DPSs from endangered to threatened was also proposed (Service 2003). In the same notice the Service also proposed a special rule under section 4(d) of the Act to exempt take for routine ranching operations for the Central DPS and, if reclassified to threatened, for the Santa Barbara and Sonoma County DPSs (Service 2003). On August 4, 2004, after determining that the listed Central DPS was threatened (Service 2004), the Service determined that the Santa Barbara and Sonoma County DPSs were threatened as well, and reclassified the California tiger salamander as threatened throughout its range, removing the Santa Barbara and Sonoma County populations as separately listed DPSs (Service 2004). In this notice we also finalized the special rule to exempt take for routine ranching operations for the California tiger salamander throughout its range (Service 2004).

On August 18, 2005, as a result of litigation of the August 4, 2004, final rule on the reclassification of the California tiger salamander DPSs (*Center for Biological Diversity et al. v. United States Fish and Wildlife Service et al.*, C 04-04324 WHA (N.D. Cal. 2005), the District Court of Northern California sustained the portion of the 2004 rule pertaining to listing the Central California tiger salamander as threatened with a special rule, vacated the 2004 rule with regard to the Santa Barbara and Sonoma DPSs, and reinstated their prior listing as endangered. The List of Endangered and Threatened Wildlife in part 17, subchapter B of Chapter I, title 50 of the Code of Federal Regulations (CFR) has not been amended to reflect the vacatures contained in this order, and continues to show the range-wide reclassification of the California tiger salamander as a threatened species with a special rule. We are currently in the process of correcting the CFR to reflect the current status of the species throughout its range. The California tiger salamander was listed by the State of California as a threatened species on May 20, 2010.

Status of the Species: Thirty-one percent (221 of 711 records and occurrences) of all Central California tiger salamander records and occurrences are located in Alameda, Santa Clara, San Benito (excluding the extreme western end of the County), southwestern San Joaquin, western Stanislaus, western Merced, and southeastern San Mateo counties. Of these counties, most of the records are from eastern Alameda and Santa Clara counties (CDFG 2010; Service 2004). The CDFG (2010) now considers 13 of these records from the Bay Area region as extirpated or likely to be extirpated.

Of the 140 reported California tiger salamander localities where wetland habitat was identified, only 7 percent were located in vernal pools (CDFG 2010). The Bay Area is located within the Central Coast and Livermore vernal pool regions (Keeler-Wolf *et al.* 1998). Vernal pools within the Coast Range are more sporadically distributed than vernal pools in the Central Valley (Holland 2003). This rate of loss suggests that vernal pools in these counties are disappearing faster than previously reported (Holland 2003). Most of the vernal pools in the Livermore Region in Alameda County have been destroyed or degraded by urban development, agriculture, water diversions, poor water quality, and long-term overgrazing (Keeler-Wolf *et al.* 1998). During the 1980s and 1990s, vernal pools were lost at a 1.1 percent annual rate in Alameda County (Holland 1998).

Due to the extensive losses of vernal pool complexes and their limited distribution in the Bay Area region, many breeding sites consist of artificial water bodies. Overall, 89 percent (124) of the identified water bodies are stock, farm, or berm ponds used by cattle grazing and/or as a temporary water source for small farm irrigation (CDFG 2010). This places the California tiger salamander at great risk of hybridization with non-native tiger salamanders, especially in Santa Clara and San Benito counties. Without long-term maintenance, the longevity of artificial breeding habitats is uncertain relative to naturally occurring vernal pools that are dependent on the continuation of seasonal weather patterns (Shaffer *et al.* 2004). California tiger salamanders are now primarily restricted to artificial breeding ponds, such as bermed ponds or stock ponds, which are typically located at higher elevations (CDFG 2010).

With the exception of the information provided above, the Service has determined that the Status of the Species is substantively unchanged from the time the Service issued its Intra-Service Opinion for the HCP/NCCP. Therefore, the Service is incorporating by reference the Status of the Species from that opinion. For additional information regarding the Status of the Species, including description, distribution, status and natural history, and threats, refer to the Intra-Service Opinion for the HCP/NCCP.

Alameda whipsnake

Listing Status: The Alameda whipsnake was federally listed as threatened on December 5, 1997 (Service 1997). Approximately 406,598 acres within Contra Costa, Alameda, Santa Clara, and San Joaquin counties were designated critical habitat for the Alameda whipsnake on October 3, 2000 (Service 2000). The final rule was vacated and remanded on May 9, 2003. Critical habitat was re-proposed on October 18, 2005 (Service 2005b). A final rule on critical habitat was released on October 2, 2006 (Service 2006a). A draft recovery plan was published in November 2002 (Service 2002b).

Status of the Species: The Alameda whipsnake is known to inhabit chemise-redshank chaparral, mixed chaparral, coastal scrub, annual grassland, blue oak-foothill pine, blue oak woodland, coastal oak woodland, valley oak woodland, eucalyptus, redwood, and riparian communities (Mayer and Laudenslayer, Jr. 1988). Grassland and oak woodland habitat independent of chaparral habitat may also be important for Alameda whipsnake populations. A recent examination of recorded whipsnake observations revealed that the species has been found 32 percent of the time in grass- or woodland habitats on slopes of varying aspects (Alvarez 2006). Additional data on habitat use gathered from incidental observations of free-ranging Alameda whipsnakes and recapture data from trapping surveys showed regular use of these habitats at distances greater than 600 feet from scrub and chaparral and included observations of the species more than 3.7 miles from scrub and chaparral communities (Swaim pers. comm. 2004).

With the exception of the information provided above, the Service has determined that the Status of the Species is substantively unchanged from the time the Service issued its Intra-Service Opinion for the HCP/NCCP. Therefore, the Service is incorporating by reference the Status of the Species from that opinion. For additional information regarding the Status of the Species,

including description, distribution, status and natural history, and threats, refer to the Intra-Service Opinion for the HCP/NCCP.

Giant garter snake

Listing Status: The giant garter snake was listed as a threatened species on October 20, 1993 (Service 1993). The Service published the *Draft Recovery Plan for the Giant Garter Snake* in July 1999.

Status of the Species: With the exception of the information provided above, the Service has determined that the Status of the Species is substantively unchanged from the time the Service issued its Intra-Service Opinion for the HCP/NCCP. Therefore, the Service is incorporating by reference the Status of the Species from that opinion. For additional information regarding the Status of the Species, including description, distribution, status and natural history, and threats, refer to the Intra-Service Opinion for the HCP/NCCP.

San Joaquin Kit Fox

Listing Status: The San Joaquin kit fox was listed as an endangered species on March 11, 1967 (Service 1967) and it was listed by the State of California as a threatened species on June 27, 1971.

Status of the Species: The status of the San Joaquin kit fox population in Contra Costa County is not well documented, but the infrequency of confirmed sightings suggest their density is low or their occurrence could be periodic (Jones and Stokes 2006). Maintaining a connection to core San Joaquin kit fox populations in the San Joaquin Valley is likely critical to supporting a viable kit fox population in Contra Costa County. The HCP/NCCP aims to protect land in the Plan Area in order to protect San Joaquin kit fox habitat and to provide linkages to areas to the south and east. Currently, the HCP/NCCP has acquired numerous parcels to the east of Los Vaqueros Reservoir area and in the vicinity of Black Diamond Mines Regional Preserve that are to be incorporated into the preserve system of the HCP/NCCP.

With the exception of the information provided above, the Service had determined that the Status of the Species is substantively unchanged from the time the Service issued its Intra-Service Opinion for the HCP/NCCP. Therefore, the Service is incorporating by reference the Status of the Species from that opinion. For additional information regarding the Status of the Species, including description, distribution, status and natural history, and threats, refer to the Intra-Service Opinion for the HCP/NCCP.

Vernal Pool Fairy Shrimp

Listing Status: A final rule was published on September 19, 1994, listing the vernal pool fairy shrimp as threatened under the Act (Service 1994). The final rule to designate critical habitat for 15 vernal pool species, including the vernal pool fairy shrimp, was published on August 6, 2003 (Service 2003). A final rule was published again on August 11, 2005 (Service 2005a). Further

information on the life history and ecology of the vernal pool fairy shrimp may be found in the final listing rule, the final rule to designate critical habitat, the *Recovery Plan for Vernal Pool Ecosystems of California and Southern Oregon* (Service 2005c), Eng *et al.* (1990), Helm (1998), Simovich *et al.* (1992), and Volmar (2002).

Status of the Species: With the exception of the information provided above, the Service has determined that the Status of the Species is substantively unchanged from the time the Service issued its Intra-Service Opinion for the HCP/NCCP. Therefore, the Service is incorporating by reference the Status of the Species from that opinion. For additional information regarding the Status of the Species, including description, distribution, status and natural history, and threats, refer to the Intra-Service Opinion for the HCP/NCCP.

Longhorn Fairy Shrimp

Listing Status: A final rule was published on September 19, 1994, to list longhorn fairy shrimp as endangered under the Act (Service 1994). The final rule to designate critical habitat for 15 vernal pool species, including the longhorn fairy shrimp, was published on August 6, 2003 (Service 2003). A final rule was published again on August 11, 2005 (Service 2005a). Further information on the life history and ecology of the longhorn fairy shrimp may be found in the final listing rule, the final rule to designate critical habitat, the *Recovery Plan for Vernal Pool Ecosystems of California and Southern Oregon* (Service 2005b), and Eng *et al.* (1990).

Status of the Species: Since the time of listing, surveys for longhorn fairy shrimp throughout its range have not located additional populations of the species, although additional occurrences within the four known populations have been detected. Currently, the California Natural Diversity Database reports 11 occurrences of longhorn fairy shrimp (CDFG 2010).

Informal monitoring of known populations of longhorn fairy shrimp has occurred within the Brushy Peak Preserve, Alameda County. There are several vernal pools that have longhorn fairy shrimp within the 507-acre Brushy Peak Preserve, which is owned by the Livermore Area Recreation and Park District and managed by the East Bay Regional Park District (EBRPD). These pools are within rock outcrops within multiple indentations that seasonally pool water, but the exact number of vernal pools containing longhorn fairy shrimp has not been quantified.

With the exception of the information provided above, the Service has determined that the Status of the Species is substantively unchanged from the time the Service issued its Intra-Service Opinion for the HCP/NCCP. Therefore, the Service is incorporating by reference the Status of the Species from that opinion. For additional information regarding the Status of the Species, including description, distribution, status and natural history, and threats, refer to the Intra-Service Opinion for the HCP/NCCP.

Vernal Pool Tadpole Shrimp

Listing Status: A final rule was published on September 19, 1994, to list vernal pool tadpole shrimp as endangered under the Act (Service 1994). The final rule to designate critical habitat for 15 vernal pool species, including the vernal pool tadpole shrimp, was published on August 6, 2003 (Service 2003). A final rule was published again on August 11, 2005 (Service 2005a). Further information on the life history and ecology of the vernal pool tadpole shrimp may be found in the final listing rule, the final rule to designate critical habitat, the *Recovery Plan for Vernal Pool Ecosystems of California and Southern Oregon* (Service 2005b), and Eng *et al.* (1990).

Status of the Species: The vernal pool tadpole shrimp is a California Great Central Valley endemic species, with the majority of the populations occurring in the Sacramento Valley. This species has also been reported from the Sacramento River Delta to the east side of San Francisco Bay, and from a few scattered localities in the San Joaquin Valley from San Joaquin County to Madera County (Rodgers 2001). Currently, the CNDDB lists 270 occurrences of vernal pool tadpole shrimp with one occurrence in Contra Costa County within the city limits of Antioch along Empire Mine Road (CDFG 2011). Currently the city of Antioch is not a permittee under the HCP/NCCP nor are any activities within the Antioch city limits covered by the HCP/NCCP.

With the exception of the information provided above, the Service has determined that the Status of the Species is substantively unchanged from the time the Service issued its Intra-Service Opinion for the HCP/NCCP. Therefore, the Service is incorporating by reference the Status of the Species from that opinion. For additional information regarding the Status of the Species, including description, distribution, status and natural history, and threats, refer to the Intra-Service Opinion for the HCP/NCCP.

Vernal Pool Fairy Shrimp and Longhorn Fairy Shrimp Critical Habitat

The Service designated 228,785 acres of critical habitat for the vernal pool fairy shrimp and 13,557 acres of critical habitat for the longhorn fairy shrimp in 2005 (Service 2005a). In a February 10, 2006, revision, we identified the designated critical habitat on a species by unit basis (Service 2006). In determining which areas to designate as critical habitat, the Service considers those physical and biological features (primary constituent elements) that are essential to the conservation of the species, and that may require special management considerations and protections (50 CFR § 424.14).

The primary constituent elements of critical habitat for both vernal pool fairy shrimp and longhorn fairy shrimp are the habitat components that provide:(1) topographic features characterized by mounds and swales and depressions within a matrix of surrounding uplands that result in complexes of continuously, or intermittently, flowing surface water in the swales connecting the pools and providing for dispersal and promoting hydroperiods of adequate length in the pools; (2) depressional features including isolated vernal pools with underlying restrictive soil layers that become inundated during winter rains and that continuously hold water for a

minimum of 23 days in all but the driest years; thereby providing adequate water for incubation, maturation, and reproduction. As these features are inundated on a seasonal basis, they do not promote the development of obligate wetland vegetation habitats typical of permanently flooded emergent wetlands; (3) sources of food, expected to be detritus occurring in the pools, contributed by overland flow from the pools' watershed, or the results of biological processes within the pools themselves, such as single-celled bacteria, algae, and dead organic matter, to provide for feeding; and (4) structure within the pools consisting of organic and inorganic materials, such as living and dead plants from plant species adapted to seasonally inundated environments, rocks, and other inorganic debris that may be washed, blown, or otherwise transported into the pools, that provide shelter.

Environmental Baseline

All Species

As of the 2010 annual report for the HCP/NCCP, 61.4 acres of terrestrial impacts, 0.61 acres of aquatic (non-stream) impacts, and 138.3 linear feet of aquatic (stream) impacts have been authorized under the HCP/NCCP. In addition, 4,475.7 acres of terrestrial habitat, 36.9 acres of aquatic (non-stream) habitat, and 116,569.2 linear feet of aquatic (stream) habitat have been conserved under the HCP/NCCP, which support numerous occurrences of the Covered Species.

California Red-legged frog

The proposed action is located in the East San Francisco Bay Core Area of the East San Francisco Bay Recovery Unit number 16 for the California red-legged frog (Service 2002a). California red-legged frogs have been documented throughout the 18,500-acre Los Vaqueros Watershed (Watershed) and stock ponds in the Watershed support some of the highest densities of California red-legged frog in the region (Jones and Stokes Associates 2006). The CNDDB reports 96 California red-legged frog occurrences in and near the Watershed (CDFG 2010).

The HCP/NCCP provides a regional conservation strategy that includes the development and acquisition of a preserve system. A completed preserve system will encompass 23,800 to 30,300 acres of land in eastern Contra Costa County and will include connections linking existing and future protected private and public lands.

There are 127 occurrences of the California red-legged frog within the action area in the CNDDB (CDFG 2011). A few additional occurrences of the California red-legged frog have been documented within the action area and some additional take of the species has occurred since the HCP/NCCP was permitted. The current expansion of the Los Vaqueros Reservoir will result in the inundation of 451.27 acres of upland habitat and two ponds and four marshes that support California red-legged; however, the Service believes that the Environmental Baseline for this species is not substantively different from that described in the Service's Intra-Service Opinion for the HCP/NCCP. Therefore, the Service is incorporating by reference the Environmental Baseline from that opinion. For additional information regarding the

Environmental Baseline for the California red-legged frog, refer to the Intra-Service Opinion for the HCP/NCCP.

Central California tiger salamander

The CNDDB describes over 150 occurrences of the Central California tiger salamanders in Contra Costa County with the majority of these records from the vicinity of the Los Vaqueros Watershed (CDFG 2010). A few additional occurrences of the Central California tiger salamander have been documented within the action area and some additional take of the species has occurred since the HCP/NCCP was permitted. The current expansion of the Los Vaqueros Reservoir will result in the inundation of 451.27 acres of upland habitat and one pond and one marsh known to support breeding populations of the Central California tiger salamander; however, the Service believes that the Environmental Baseline for this species is not substantively different from that described in the Service's Intra-Service Opinion for the HCP/NCCP. Therefore, the Service is incorporating by reference the Environmental Baseline from that opinion. For additional information regarding the Environmental Baseline for the Central California tiger salamander, refer to the Intra-Service Opinion for the HCP/NCCP.

Alameda whipsnake

There are 22 occurrences of the Alameda whipsnake within the action area in the CNDDB (CDFG 2011). The Service believes that the Environmental Baseline for this species is not substantively different from that described in the Service's Intra-Service Opinion for the HCP/NCCP. Therefore, the Service is incorporating by reference the Environmental Baseline from that opinion. For additional information regarding the Environmental Baseline for the Alameda whipsnake, refer to the Intra-Service Opinion for the HCP/NCCP.

Giant garter snake

There are no records of the giant garter snake within the action area in the CNDDB (CDFG 2011). The Service believes that the Environmental Baseline for this species is not substantively different from that described in the Service's Intra-Service Opinion for the HCP/NCCP. Therefore, the Service is incorporating by reference the Environmental Baseline from that opinion. For additional information regarding the Environmental Baseline for the giant garter snake refer to the Intra-Service Opinion for the HCP/NCCP.

San Joaquin Kit Fox

The Bureau of Reclamation recently completed formal consultation on the Contra Costa Water District's (CCWD) proposed expansion of the Los Vaqueros Reservoir (Reservoir Expansion) (Service file number 81420-2009-F-0201-1). The Reservoir Expansion will result in permanent impacts to 410.21 acres of annual grasslands and 29.34 acres of oak woodland. The expanded reservoir will also raise the waterline into three sections of oak woodland habitat to the west of the existing reservoir isolating two large grassland areas (totaling 284.76 acres) from

surrounding grasslands likely rendering these areas inaccessible to San Joaquin kit fox. In addition, a grassland corridor to the west of the reservoir will be interrupted by approximately 700 feet of oak woodland at each of three locations making it unlikely that San Joaquin kit fox will use the remaining area to the west of the expanded reservoir following reservoir expansion. Loss of this corridor will compromise the southern branch of the Round Valley corridor to Black Diamond Mines Regional Preserve.

In order to compensate for temporary and permanent effects to San Joaquin kit fox from loss of habitat from the Reservoir Expansion, the CCWD will acquire and preserve, in perpetuity, a minimum of 4,890 acres. This includes additional lands preserved to those impacted in order to account for the loss of habitat, movement corridors, and habitat connectivity for San Joaquin kit fox within the northern portion of their range, and for the loss of San Joaquin kit fox conservation easement lands. The compensation is expected to preserve existing movement corridors within the northern San Joaquin kit fox range and currently includes one large under crossing of the I-580 corridor in Alameda County.

San Joaquin kit fox sightings have been documented within and surrounding the action area (CDFG 2010, CCWD 2010). Documented sightings within and near the action area include: multiple sightings between 1967 and 1989 along Brushy Creek east of Vasco Road (CDFG 2010); two San Joaquin kit fox sightings along the proposed Vasco Road alignment in 1989 (Jones and Stokes 1990); two records from May 2001 and June 2002 on Vasco Caves Regional Preserve (Clark *et al.* 2003); and two sightings near Brushy Creek in 2002 (CDFG 2010). CCWD has performed annual kit fox surveys throughout the Los Vaqueros Watershed since constructing the reservoir in 1998. During this period a single San Joaquin kit fox was observed in 2008 in close proximity to the Los Vaqueros Watershed Administrative Offices northeast of the reservoir (Howard 2008).

Grasslands throughout the action area provide suitable San Joaquin kit fox habitat. Because San Joaquin kit foxes can use native habitats interspersed with development if there is minimal disturbance, adequate dispersal corridors, and sufficient prey-base the HCP/NCCP considers grassland habitat within wind turbine areas suitable for kit fox use. Threats within the action area include the loss, fragmentation, and degradation of habitat through urban, rural, agricultural, and wind development. Although the use of pesticides to control rodents and other pests is restricted on CCWD and HCP/NCCP preserve lands, use of pesticides on private land within the action area may pose a threat to kit fox on private lands either directly through poisoning or indirectly through reduction of prey abundance. In addition, coyotes, cited as a significant source of San Joaquin kit fox mortality, are thought to have increased in number on the Los Vaqueros Watershed since reservoir filling in 1998 (CCWD 2011).

Longhorn Fairy Shrimp

There are two known occurrences of longhorn fairy shrimp within the action area in the CNDDB (CDFG 2011). The Service believes that the Environmental Baseline for this species is not substantively different from that described in the Service's Intra-Service Opinion for the HCP/NCCP. Therefore, the Service is incorporating by reference the Environmental Baseline

from that opinion. For additional information regarding the Environmental Baseline for the longhorn fairy shrimp, refer to the Intra-Service Opinion for the HCP/NCCP.

Vernal Pool Fairy Shrimp

There are thirteen known occurrence of vernal pool fairy shrimp within the action area in the CNDDB (CDFG 2011). The Service believes that the Environmental Baseline for this species is not substantively different from that described in the Service's Intra-Service Opinion for the HCP/NCCP. Therefore, the Service is incorporating by reference the Environmental Baseline from that opinion. For additional information regarding the Environmental Baseline for the vernal pool fairy shrimp, refer to the Intra-Service Opinion for the HCP/NCCP.

Vernal Pool Tadpole Shrimp

There are no known occurrences of vernal pool tadpole shrimp within the action area in the CNDDB (CDFG 2011). The Service believes that the Environmental Baseline for this species is not substantively different from that described in the Service's Intra-Service Opinion for the HCP/NCCP. Therefore, the Service is incorporating by reference the Environmental Baseline from that opinion. For additional information regarding the Environmental Baseline for the vernal pool tadpole shrimp, refer to the Intra-Service Opinion for the HCP/NCCP.

Vernal Pool Fairy Shrimp and Longhorn Fairy Shrimp Critical Habitat

Critical Habitat Unit 19 for vernal pool fairy shrimp includes three subunits; Units 19A-B are located in Contra Costa County. Unit 19C is located in Alameda County. Units 19A and 19B fall within the Plan Area. Unit 19A lies just north of Marsh Creek Road and Unit 19B lies north of Corral Hollow Road, west of Clifton Court Forebay (Service 2005a). Unit 19C is outside the action area. Units 19A-B include approximately 6,439 acres (Service 2005a). These units are essential to the conservation of the species because they support nearly all of the known occurrences of vernal pool fairy shrimp within Contra Costa and Alameda Counties and because they are necessary to maintain the current geographic and ecological distribution of the species.

Critical Habitat Unit 1 for longhorn fairy shrimp includes two subunits referred to as the Altamont Pass Subunits; Unit 1A is located in Contra Costa County and Unit 1B in Alameda County. Within the Altamont Pass subunits longhorn fairy shrimp occur within clear depression pools in sandstone outcrops (Service 2005a). Unit 1A falls within the Plan Area primarily within the Vasco Caves Regional Preserve. Unit 1B is outside the action area. Units 1A-B include approximately 791 acres (Service 2005a). These units are essential to the conservation of the species because they support nearly all of the known occurrences of longhorn fairy shrimp within Contra Costa and Alameda Counties and because they are necessary to maintain the current geographic and ecological distribution of the species.

Effects of the Proposed Action

California Red-legged frog and Central California Tiger Salamander

The proposed action will result in temporary and permanent effects to aquatic and upland habitat for California red-legged frog and Central California tiger salamander. This could result in individuals being directly and/or indirectly injured or killed by activities that disturb breeding, feeding, sheltering, and dispersal habitat. The effects of activities covered by the RGP were analyzed in the Intra-Service Opinion for the HCP/NCCP, including minimization and mitigation measures for both species. No additional effects or effects different from those analyzed in the Intra-Service Opinion for the HCP/NCCP are expected. Therefore, the Service is incorporating by reference the Effects of the Proposed Action from that opinion. For additional information regarding the Effects of the Proposed Action on California red-legged frogs and the Central California tiger salamander, refer to the Intra-Service Opinion for the HCP/NCCP.

Alameda Whipsnake

The proposed action will result in temporary and permanent effects to habitat suitable for Alameda whipsnake resulting in direct and indirect effects to the species. The effects of activities covered by the RGP were analyzed in the Intra-Service Opinion for the HCP/NCCP, including minimization and mitigation measures. No additional effects or effects different from those analyzed in the Intra-Service Opinion for the HCP/NCCP are expected. Therefore, the Service is incorporating by reference the Effects of the Proposed Action from that opinion. For additional information regarding the Effects of the Proposed Action on Alameda whipsnakes, refer to the Intra-Service Opinion for the HCP/NCCP.

Giant Garter Snake

The proposed action will result in temporary and permanent effects to habitat suitable for giant garter snake resulting in direct and indirect effects to the species. The effects of activities covered by the RGP were analyzed in the Intra-Service Opinion for the HCP/NCCP, including minimization and mitigation measures. No additional effects or effects different from those analyzed in the Intra-Service Opinion for the HCP/NCCP are expected. Therefore, the Service is incorporating by reference the Effects of the Proposed Action from that opinion. For additional information regarding the Effects of the Proposed Action on giant garter snakes, refer to the Intra-Service Opinion for the HCP/NCCP.

San Joaquin Kit Fox

The proposed action will result in temporary and permanent effects to annual grassland habitat suitable for San Joaquin kit fox denning, foraging, or dispersal resulting in direct and indirect effects to the species. The effects of activities covered by the RGP were analyzed in the Intra-Service Opinion for the HCP/NCCP, including minimization and mitigation measures. No additional effects or effects different from those analyzed in the Intra-Service Opinion for the

HCP/NCCP are expected. Therefore, the Service is incorporating by reference the Effects of the Proposed Action from that opinion. For additional information regarding the Effects of the Proposed Action on San Joaquin kit foxes, refer to the Intra-Service Opinion for the HCP/NCCP.

Vernal Pool Fairy Shrimp, Longhorn Fairy Shrimp, and Vernal Pool Tadpole Shrimp

Direct and indirect effects to vernal pool fairy shrimp, longhorn fairy shrimp, and tadpole shrimp will result from activities covered by the proposed RGP. The effects of activities covered by the RGP were analyzed in the Intra-Service Opinion for the HCP/NCCP, including minimization and mitigation measures for both species. No additional effects or effects different from those analyzed in the Intra-Service Opinion for the HCP/NCCP are expected. Therefore, the Service is incorporating by reference the Effects of the Proposed Action from that opinion. For additional information regarding the Effects of the Proposed Action on vernal pool fairy shrimp and longhorn fairy shrimp, refer to the Intra-Service Opinion for the HCP/NCCP.

Vernal Pool Fairy Shrimp Critical Habitat

Critical habitat for vernal pool fairy shrimp is found within the action area. Effects to vernal pool fairy shrimp critical habitat will result from activities covered by the proposed RGP. The effects of activities covered by the RGP were analyzed in the Intra-Service Opinion for the HCP/NCCP, including minimization and mitigation measures. No additional effects or effects different from those analyzed in the Intra-Service Opinion for the HCP/NCCP are expected. Therefore, the Service is incorporating by reference the Effects of the Proposed Action from that opinion. For additional information regarding the Effects of the Proposed Action on vernal pool fairy shrimp critical habitat, refer to the Intra-Service Opinion for the HCP/NCCP.

Longhorn Fairy Shrimp Critical Habitat

Critical habitat for longhorn fairy shrimp is found within the action area. Effects to longhorn fairy shrimp critical habitat will result from activities covered by the proposed RGP. The effects of activities covered by the RGP were analyzed in the Intra-Service Opinion for the HCP/NCCP, including minimization and mitigation measures. No additional effects or effects different from those analyzed in the Intra-Service Opinion for the HCP/NCCP are expected. Therefore, the Service is incorporating by reference the Effects of the Proposed Action from that opinion. For additional information regarding the Effects of the Proposed Action on longhorn fairy shrimp critical habitat, refer to the Intra-Service Opinion for the HCP/NCCP.

Cumulative Effects

Cumulative effects include the effects of future State, Tribal, local or private actions that are reasonably certain to occur in the action area considered in this Biological Opinion. Future Federal actions that are unrelated to the proposed action are not considered in this section because they require separate consultation pursuant to section 7 of the Act.

The Service is aware of numerous non-federal actions currently planned in the vicinity of the proposed action, defined here as eastern Contra Costa County. Environmental analysis is either underway or completed for many of these projects. These projects include such actions as urban expansion, road improvement projects, water transfers and developments, and continued agricultural development. The cumulative effects of these known actions pose a significant threat to the eventual recovery of all listed species in this area. However, many of these activities will be reviewed under section 7 of the Act as a result of the Federal nexus provided by section 404 of the Federal Water Pollution Control Act, as amended (Clean Water Act). Additionally, many of these activities are included as Covered Activities for the HCP/NCCP and effects resulting from these activities are being mitigated for under the HCP/NCCP.

Urban expansion in eastern Contra Costa and Alameda counties and western San Joaquin County will further fragment and isolate populations of California red-legged frogs, California tiger salamanders, and San Joaquin kit fox from other nearby populations. Urban expansion is accompanied by increased traffic resulting in increased wildlife injury and mortality from vehicle strikes. A 2009 wildlife movement study conducted along a 2.5-mile stretch of Vasco Road adjacent to the action area documented substantial wildlife mortality from vehicle strikes including 50 California tiger salamanders and 120 California red-legged frogs over a 15 month period (Mendelsohn *et al.* 2009). Continued development and maintenance of roadways and water projects to serve expanding urban areas are also likely to further fragment and isolate populations of these species. In addition, urban expansion is generally accompanied by increased predation associated with domesticated pets or feral animals that negatively affect populations of these species.

The global average temperature has risen by approximately 0.6 degrees Celsius during the 20th Century (IPPC 2001, 2007; Adger *et al.* 2007). There is an international scientific consensus that most of the warming observed has been caused by human activities (IPPC 2001, 2007; Adger *et al.* 2007), and that it is "very likely" that it is largely due to manmade emissions of carbon dioxide and other greenhouse gases (Adger *et al.* 2007). Ongoing climate change (Anonymous 2007; Inkley *et al.* 2004; Adger *et al.* 2007; Kanter 2007) likely imperils several listed species including the California red-legged frog, Central California tiger salamander, Alameda whipsnake, giant garter snake, San Joaquin kit fox, vernal pool fairy shrimp, longhorn fairy shrimp, and vernal pool tadpole shrimp and the resources necessary for their survival. Since climate change threatens to disrupt annual weather patterns, it may result in a loss of their habitats and/or food sources, and/or increased numbers of their predators, parasites, and diseases. Where populations are isolated, a changing climate may result in local extinction, with range shifts precluded by lack of habitat.

Conclusion

After reviewing the current status of the California red-legged frog, Central California tiger salamander, Alameda whipsnake, giant garter snake, San Joaquin kit fox, vernal pool fairy shrimp, longhorn fairy shrimp, and vernal pool tadpole shrimp, the environmental baseline for the action area, the effects of the proposed action, and the cumulative effects, it is the Service's

biological opinion that the RGP that would be used to authorize placement of dredged or fill material into waters of the U.S. for multiple actions considered to be Covered Activities under the East Contra Costa Habitat Conservation Plan/Natural Community Conservation Plan, as proposed, is not likely to jeopardize the continued existence of the California red-legged frog, Central California tiger salamander, Alameda whipsnake, giant garter snake, San Joaquin kit fox, vernal pool fairy shrimp, longhorn fairy shrimp, or vernal pool tadpole shrimp. We base this conclusion on the following: (1) some project effects are temporary in nature;(2) the proposed action does not include effects to listed species that were not analyzed in the Intra-Service Opinion for the HCP/NCCP; and (3) establishment of a 23,800 to 30,300 acres preserve system in eastern Contra Costa County to preserve and manage habitat for listed species in perpetuity.

The project is located within critical habitat for the vernal pool fairy shrimp and longhorn fairy shrimp; however the proposed action will not result in its adverse modification or destruction. We based this conclusion on the following: (1) only a small percentage of critical habitat for vernal pool fairy shrimp and longhorn fairy shrimp would be affected by the proposed action; (2) the PCEs that are essential to the conservation value of vernal pool fairy shrimp and longhorn fairy shrimp critical habitat will remain and continue to contribute to the conservation function of the unit as a whole; and (3) range-wide critical habitat for vernal pool fairy shrimp and longhorn fairy shrimp would remain functional.

INCIDENTAL TAKE STATEMENT

Section 9(a)(1) of the Act and Federal regulations pursuant to section 4(d) of the Act prohibit the take of endangered and threatened species without special exemption. Take is defined as harass, harm, pursue, hunt, shoot, wound, kill, trap, capture or collect, or attempt to engage in any such conduct. Harm is further defined by the Service to include significant habitat modification or degradation that results in death or injury to listed species by significantly impairing behavioral patterns, including breeding, feeding, or sheltering. Harass is defined by the Service as actions that create the likelihood of injury to a listed species by annoying it to such an extent as to significantly disrupt normal behavior patterns which include, but are not limited to, breeding, feeding, or sheltering. Incidental take is defined as take that is incidental to, and not the purpose of, the carrying out of an otherwise lawful activity. Under the terms of section 7(b)(4) and section 7(o)(2), taking that is incidental to and not intended as part of the agency action is not considered to be prohibited taking under the Act provided that such taking is in compliance with this Incidental Take Statement.

The measures described below are nondiscretionary, and must be implemented by the Corps so that they become binding conditions of any grant or permit issued to the applicant, as appropriate, for the exemption under section 7(o)(2) to apply. The Corps has a continuing duty to regulate the activity that is covered by this incidental take statement. If the Corps (1) fails to require the applicant, or any of its contractors to adhere to the terms and conditions of the incidental take statement through enforceable terms, and/or (2) fails to retain oversight to ensure compliance with these terms and conditions, the protective coverage of section 7(o)(2) may lapse.

Amount or Extent of Take

All Listed Species

The amount of incidental take exempted from the prohibitions described under section 9 of the Act through this Biological Opinion is a subset of the incidental take authorized under the HCP/NCCP. Take associated with activities carried out under the HCP/NCCP has been authorized under a section 10(a)(1)(B) permit; however, incidental take associated with actions authorized, funded, or carried out by Federal Agencies cannot be authorized under section 10 of the Act.

The extent of the take will be difficult to detect or quantify because of the ecology and biology of these species. Additionally, their size and cryptic nature makes the finding of a dead specimen unlikely. Seasonal population fluctuations may also make losses of these species difficult to quantify. Due to the difficulty in quantifying the number of California red-legged frog, Central California tiger salamander, Alameda whipsnake, giant garter snake, San Joaquin kit fox, vernal pool fairy shrimp, longhorn fairy shrimp, or vernal pool tadpole shrimp that will be taken as a result of the proposed action, the Service is quantifying take incidental to the proposed project as the number of acres of habitat that will become unsuitable for the species as a result of the action.

The exact subset of incidental take expected in conjunction with the RGP cannot be specifically segregated from the amount of take authorized under the HCP/NCCP, therefore, the Service is only authorizing the same amount of incidental take associated with the HCP/NCCP (i.e., the take is not in addition to that associated with the HCP/NCCP). The Service estimates that incidental take of California red-legged frog, Central California tiger salamander, San Joaquin kit fox, giant garter snake, Alameda whipsnake, vernal pool fairy shrimp, longhorn fairy shrimp, and vernal pool tadpole shrimp associated with loss of up to 13,387 acres of habitat will be affected.

Upon implementation of the Reasonable and Prudent Measures, incidental take of California red-legged frog, Central California tiger salamander, San Joaquin kit fox, giant garter snake, Alameda whipsnake, vernal pool fairy shrimp, longhorn fairy shrimp, and vernal pool tadpole shrimp associated with the Corps' proposed RGP will become exempt from the prohibitions described under section 9 of the Act.

Effect of the Take

In the accompanying biological opinion and the Intra-Service Opinion for the HCP/NCCP, the Service has determined that this level of anticipated take is not likely to result in jeopardy to the California red-legged frog, Central California tiger salamander, San Joaquin kit fox, giant garter snake, Alameda whipsnake, vernal pool fairy shrimp, longhorn fairy shrimp, and vernal pool tadpole shrimp

Reasonable and Prudent Measures

The Service believes the following reasonable and prudent measure is necessary and appropriate to minimize the effect of take on the Central California tiger salamander, San Joaquin kit fox, giant garter snake, Alameda whipsnake, vernal pool fairy shrimp, longhorn fairy shrimp, and vernal pool tadpole shrimp:

1. The proposed action will be implemented by the project proponent as described in the *Description of the Proposed Action* and the East Contra Costa Habitat Conservation Plan/Natural Communities Conservation Plan and further, conservation measures shall be supplemented by terms and conditions (a) through (e).

Terms and Conditions

To be exempt from the prohibitions of Section 9 of the Act, the Corps shall ensure compliance with the following terms and conditions, which implement the reasonable and prudent measure described above. These terms and conditions are nondiscretionary.

The following terms and conditions will implement the Reasonable and Prudent Measure described above:

a. The applicant shall minimize the potential for harm, harassment, injury, and death of federally listed wildlife species resulting from project related activities including implementation of the Conservation Measures in this Biological Opinion.

b. The applicant shall adhere to all of the conservation and management measures of the HCP/NCCP and the Terms and Conditions of its Incidental Take Permit (TE160958-0).

c. All activities authorized by the Corps under this RGP must occur while the HCP/NCCP's Incidental Take Permit (TE160958-0) is valid.

d. If the Corps determines that the activity complies with the terms and conditions of the RGP, including confirmation that proposed impacts to aquatic resources are minimal, written notification will be provided to the Conservancy, the Service, and CDFG consistent with the reporting requirements of the HCP/NCCP; this confirmation will be identified in the Corps' section 7 initiation letter to the Service for individual project applications under the RGP.

e. The permittee must allow representatives from the Conservancy, Service and CDFG to inspect the authorized activity at any time deemed necessary to ensure that it is being or has been accomplished in accordance with East Contra Costa HCP/NCCP and the Terms and Conditions of its Incidental Take Permit (TE160958-0).

f. All preserved, created, restored or enhanced waters of the U.S. and adjacent buffers on the project site shall be preserved and permanently protected consistent with the requirements of the East Contra Costa HCP/NCCP and subject to review and approval by the Service and CDFG.

Reporting Requirements

The Service is incorporating by reference the reporting requirements of the East Contra Costa HCP/NCCP and its associated permit and Terms and Conditions (TE160958-0).

CONSERVATION RECOMMENDATIONS

Section 7(a)(1) of the Act directs Federal agencies to utilize their authorities to further the purposes of the Act by carrying out conservation programs for the benefit of endangered and threatened species. Conservation recommendations are discretionary agency activities that can be implemented to further the purposes of the Act, such as preservation of endangered species habitat, implementation of recovery actions, or development of information and data bases. The Service requests notification of the implementation of any conservation recommendations in order to be kept informed of actions minimizing or avoiding adverse effects or benefiting listed species or their habitats. No voluntary conservation recommendations are needed or proposed for the proposed action.

RENITIATION - CLOSING STATEMENT

This concludes formal consultation on the proposed issuance of a RGP for the East Contra Costa Habitat Conservation Plan/Natural Community Conservation Plan in Contra Costa County, California. As provided in 50 CFR 402.16, reinitiating of formal consultation is required where discretionary Federal agency involvement or control over the action has been retained (or is authorized by law) and if: (1) the amount or extent of incidental take is exceeded; (2) new information reveals effects of the agency action that may affect listed species or critical habitat in a manner or to an extent not considered in this opinion; (3) the agency action is subsequently modified in a manner that causes an effect to the listed species or critical habitat that was not considered in this Biological Opinion; or (4) a new species is listed or critical habitat designated that may be affected by the action. In instances where the amount or extent of incidental take is exceeded, any operations causing such take must immediately cease, pending reinitiating.

If you have any questions regarding this Biological Opinion on the proposed issuance of a Regional General Permit for the East Contra Costa Habitat Conservation Plan/Natural Community Conservation Plan in Contra Costa County, California, please contact Stephanie Jentsch, Mike Thomas, or Eric Tattersall (Deputy Assistant Field Supervisor) of my staff at the letterhead address or at telephone (916) 414-6600.

Sincerely,

Susan K. Moore

Susan K. Moore
Field Supervisor

cc:

Scott Wilson, California Department of Fish and Game, Yountville, California.
John Kopchik, Contra Costa County, Martinez, California.

LITERATURE CITED

Adger, N., P.Aggarwal, S. Agrawala, J.Alcamo, A. Allali, O. Anisimov, N. Arnell, M. Boko, O.Canziani, T. Carter, G. Cassa, U. Confalonieri, R. Cruz, E.de Alba Alcaraz, W. Eastreling, C. Field, A. Fischlin, B. Fitzharris, C.G. Garcia, C. Hanson, H. Harasawa, K. Hennessy, S.Huq, R. Jones, L. K. Bogataj, D. Karoly, R. Kliein, Z. Kundzewicz, M. Lal, R. Lasco, G. Love, X. Lu, G. Magrin, L.J. Mata, R. McLean, B. Menne, G. Midgley, N. Mimura, M.Q. Mirza, J. Moreno, L. Mortsch, I. Niang-Diop, R. Nichols, B. Novaky, L. Nurse, A. Nyon, M. Oppenheimer, J. Palutikof, M. Parry, A. Patwardhan, P. R. Lankao, C. Rosenzweig, S. Schneider, S. Semenov, J. Smith, J. Stone, J van Ypersele, D. Vaughan, C. Vogel, T. Wilbanks, P.Wong, S. Wu, and G. Yohe. 2007. Working Group II Contribution to the Intergovernmental Panel on Climate Change Fourth Assessment Report. Climate Change 2007: Climate change impacts, adaptation and vulnerability. Brussels, Belgium.

Alvarez, J.A. 2006. Masticophis lateralis euryxanthus. Herpetological review 37(2): 233.

Anonymous. 2007. Global warming is changing the World. Science 316:188-190.

(CDFG) California Department of Fish and Game. 2010. RAREFIND. California Natural Diversity Data Base, Natural Heritage Division, Sacramento, California.

_____ 2011 RAREFIND. California Natural Diversity Data Base, Natural Heritage Division, Sacramento, California.

Clark, Jr., H. O., D. A. Smith, B. L. Cypher, and P. A. Kelly. 2003. Detection dog surveys for San Joaquin kit foxes in the northern range. Prepared for Pacific Gas & Electric Company Technical and Ecological Services, San Ramon, CA.

(CCWD) Contra Costa Water District. 2010. Draft Los Vaqueros Reservoir Expansion Project Terrestrial Action Specific Implementation Plan. Prepared for U.S. Department of Interior Bureau of Reclamation Mid-Pacific Region. July 2010.

_____ 2011. Draft Los Vaqueros Watershed 2010 Annual Monitoring Report for California Red-legged Frog, California Tiger Salamander, Western Pond Turtle, and Predator Control. January 2011.

Eng, L. L., D. Belk and C. H. Eriksen. 1990. Californian Anostraca: distribution, habitat, and status. Journal of Crustacean Biology 10: 247-277.

Helm, B. 1998. The biogeography of eight large branchiopods endemic to California. Pages 124-139 *in* C.W. Witham, E. Bauder, D. Belk, W. Ferren, and R. Ornduff (editors). Ecology, Conservation, and Management of Vernal Pool Ecosystems – Proceedings from a 1996 Conference. California Native Plant Society, Sacramento, California.

Holland, R. F. 1998. No net loss? Changes in Great Valley vernal pool distribution from 1989 to 1997. Prepared for California Department of Fish and Game Natural Heritage Division. Sacramento, California. 16pp.

_____. 2003. Distribution of vernal pool habitats in five counties of California's southern coast range. California Department of Fish and Game, Sacramento, California. 23 pp.

Howard 2008. Personal account of San Joaquin kit fox sighting in the Los Vaqueros Watershed on September 6, 2008. Email sent from J. Howard to M. Mueller, Los Vaqueros.

Inkley, D.B., M.G. Anderson, A.R. Blaustein,V. R. Burkett, B. Felzer, B. Griffith, J. Price and T. L. Root. 2004. Global Climate Change and Wildlife in North America. Technical Review 04-2, The Wildlife Society, Bethesda, Maryland.

(IPPC) International Panel on Climate Change. 2001. Climate Change 2001: The Scientific Basis. Contribution of Working Group I to the Third Assessment Report of the Intergovernmental Panel on Climate Change [Houghton, J. T., Y. Ding, D. J. Griggs, M. Noguer, P. J. van der Linden, X. Dai, K. Maskell, and C.A. Johnson (editors)]. Cambridge University Press, Cambridge, United Kingdom and New York, New York. 881 pp. Available at http://www.ipcc.ch/.

_____ 2007. Climate Change 2007: The Physical Science Basis. Contribution of Working Group I to the Fourth Assessment Report of the Intergovernmental Panel on Climate Change [Alley, R., T. Berntsen, N.L. Bindoff, Z. Chen, A. Chidthaisong, P. Friedlingstein, J. Gregory, G. Hegerl, M. Heimann, B. Hewitson, B. Hoskins, F. Joos, J. Jouzel, V. Kattsov, U. Lohmann, M. Manning, T. Matsuno, M. Molina, N. Nicholls, J. Overpeck, D. Qin, G. Raga, V. Ramaswamy, J. Ren, M. Rusticucci, S. Solomon, R. Somerville, T.F. Stocker, P. Stott, R. F. Stouffer, P. Whetton, R.A. Wood, D. Wratt. 21 pp. Available at http://www.ipcc.ch/.

Jones and Stokes. 1990. Results of supplemental biological inventories conducted for the Los Vaqueros project in and adjacent to Kellogg Creek Watershed. Prepared for the Contra Costa Water District, Sacramento, California.

_____ 2006. Final East Contra Costa habitat conservation plan/natural communities conservation plan. Prepared for the East Contra Costa Habitat Conservation Plan Authority, October 2007.

Kanter, J. 2007. Scientists detail climate changes, Poles to Tropics. New York Times. April 10, 2007.

Keeler-Wolf, T., D. R. Elam, K. Lewis, and S. A. Flint. 1998. California vernal pool assessment. Preliminary Report. State of California, Resources Agencies, Department of Fish and Game, California.

Mayer, K. E., and W. F. Laudenslayer. 1988. A Guide to Wildlife Habitats of California. California Department of Forestry and Fire Protection. Sacramento, California. 166 pages.

Mendelsohn, M., W. Dexter, E. Olson, and S Weber. 2009. Vasco Road wildlife movement study report. Prepared for Contra Costa County Public Works Department, Martinez.

Rogers, D. C. 2001. Revision of the North American Lepidurus (Notostraca: Crustacea) with a description of a new species previously confused with two other species. Journal of Crustacean Biology 24(4): 991-1006.

Shaffer, H. B., G. B. Pauly, J. C. Oliver, and P. C. Trenham. 2004. The Molecular Phylogenitics of Endangerment: Cryptic Variation and Historic Phylogeography of the California Tiger Salamander, *Ambystoma californiense*. Molecular Ecology 13: 3033-3049.

Shaffer, H. B., G.M. Fellers, S. R. Voss, C. Oliver, and G.B. Pauley. 2010. Species boundaries, phylogeography, and conservation genetics of the red-legged frog (*Rana aurora/draytonii*) complex. Molecular ecology 13: 2667-2677.

Simovich, M., R. Brusca, and J. King. 1992. Invertebrate survey 1991 1993 PGT PGE/Bechtel pipeline expansion project. University of San Diego, Alcala Park, San Diego, California.

Tatarian, P. J. 2008. Movement patterns of California red-legged frogs (*Rana draytonii*) in an inland California environment. Herpetological Conservation and Biology 3(2):155-169.

(Service) U. S. Fish and Wildlife Service.1967. Native Fish and Wildlife, Endangered Species. Federal Register 32: 4001.

_____ 1993. Endangered and threatened wildlife and plants; determination of threatened status for the giant garter snake. Federal Register 58:54053-54066.

_____ 1994. Endangered and threatened wildlife and plants; determination of endangered status for the Conservancy fairy shrimp, longhorn fairy shrimp, and the vernal pool tadpole shrimp, and threatened status for the vernal pool fairy shrimp. Federal Register 59:48136-48153

_____ 1996. Endangered and threatened wildlife and plants; determination of threatened status for the California Red-Legged Frog. Federal Register 61:25813-25833.

_____ 1997. Endangered and threatened wildlife and plants; determination of endangered status for the callippe silverspot butterfly and the Behren's silverspot butterfly and threatened status for the Alameda whipsnake. Federal Register 62(234):64306-64320.

_____ 2000. Endangered and threatened wildlife and plants; final determination of critical habitat for the Alameda whipsnake (*Masticophis lateralis euryxanthus*). Federal Register 65: 58933-58962.

_____ 2002a. Recovery plan for the California red-legged frog (*Rana aurora draytonii*). Portland, Oregon. 173 pages.

_____ 2002b. Draft Recovery Plan for Chaparral and Scrub Community Species East of San Francisco Bay, California. Region 1, Portland, Oregon. xvi + 306 pages.

_____ 2003. Endangered and Threatened Wildlife and Plants: Final Designation of Critical Habitat for Four Vernal Pool Crustaceans and Eleven Vernal Pool Plants in California and Southern Oregon; Final Rule. Federal Register68:46684-46762.

_____ 2004. Endangered and Threatened Wildlife and Plants; Determination of Threatened Status for the California Tiger Salamander; and Special Rule Exemption for Existing Routine Ranching Activities; Final Rule. Federal Register 69: 47212-47248.

_____ 2005a. Endangered and threatened wildlife and plants; final designation of critical habitat for four vernal pool crustaceans and eleven vernal pool plants in California and Southern Oregon; Evaluation of Economic Exclusions From August 2003 Final Designation; Final Rule. Federal Register 70:46924-46999.

_____ 2005b. Endangered and Threatened Wildlife and Plants; Proposed Designation of Critical Habitat for the Alameda Whipsnake, Proposed Rule. Federal Register 70: 60607-60656.

_____ 2005c. Recovery Plan for Vernal Pool Ecosystems of California and Southern Oregon. Portland, Oregon. xxvi + 606 pages.

_____ 2006a. Endangered and threatened wildlife and plants; designation of critical habitat for the California red-legged frog (*Rana aurora draytonii*), and special rule exemption associated with final listing for existing routine ranching activities; final rule. Federal Register 71(71):19244-19346. April 13.

_____ 2006b. Endangered and Threatened Wildlife and Plants; Designation of Critical Habitat for the Alameda Whipsnake, final rule. Federal Register 71:58176-58231.

_____ 2007. Federal Fish and Wildlife Permit: TE160958-0. July 25, 2007.

_____ 2010. Endangered and threatened wildlife and plants; revised critical habitat for the California red-legged frog (*Rana aurora draytonii*); final rule. Federal Register 75(56):1286-12959.

Volmar, J.E. 2002. Wildlife and rare plant ecology of eastern Merced County's vernal pool grasslands. Merced, Calfiornia.

Personal Communication

Swaim, Karen E. 2004. Swaim Biological Consulting, Livermore, California. Electronic mail message to Don Hankins (Service). November 29, 2004.

East Bay Regional Park District
Encroachment Permit

PERMIT NUMBER: 034E-19-651

PERMIT FEE: Waived

EBRPD FACILITY AFFECTED:	Marsh Creek Regional Trail
PERMITEE NAME: (Company)	Contra Costa County Flood Control and Water Conservation District
ADDRESS:	255 Glacier Drive, Martinez, CA 94553
CONTACT PERSON:	Claudia Gemberling
PHONE:	925.313.2192
EMAIL:	claudia.gemberling@pw.cccounty.us

CONDITIONS:

1. No project work shall commence until all necessary permits and environmental clearances have been obtained. It shall be the sole responsibility of the Permittee to obtain all necessary permits.
2. This permit is valid through 02/01/21.
3. At least one week prior to the commencement of work, the Permittee shall contact: Park Supervisor Carlos Lare-Masters at 510-544-3095 to coordinate access. Work during wet, storm or elevated fire hazard conditions shall be at the discretion of the Park Supervisor.
4. Prior to the commencement of work the Permittee and Permittee's Contractor shall provide and maintain:
   a. Commercial General Liability Insurance, occurrence form, with a limit of not less than **$2,000,000 for each occurrence**. If such insurance contains a general aggregate limit, either it shall apply separately to this Encroachment Permit or be no less than **two (2) times the occurrence limit**.
   b. Automobile Liability Insurance, occurrence form, with a limit of not less than **$1,000,000 for each occurrence**. Such occurrence shall include coverage for owned, hired and non-owned automobiles.
   c. Builder's Risk, Special Hazards, or other coverage may be required, as provided in the Supplementary Conditions or other written communication from the East Bay Regional Park District ("Park District").
   d. General Provisions for all insurance:
      i. All insurance shall include the Park District, its elected and appointed officers, employees, and volunteers as additional insureds with respect to this Encroachment Permit and the performance of the Description of Project/Activity on the Encroachment Permit and Permit Application. The coverage shall contain no special limitations on the scope of its protection to the above-designated insureds.
      ii. General liability insurance shall be primary and non-contributory with respect to any insurance or self-insurance programs of the Park District, its boards, commissions, officers, agents, employees, and volunteers.

N Luna
05/15/2019

iii. All insurance shall be evidenced, prior to commencement of services, by properly executed policy endorsements in addition to a certificate of insurance.

iv. In addition to requiring that the Permitee and Permitee's Contractor provide an insurance certificate showing the levels and types of coverage required for the project or contract, the Park District also requires the Permitee and Permitee's Contractor to provide the Park District with a copy of the actual endorsements (a document that modifies the terms of the underlying policy and is issued by the insurance company itself, rather than a broker) to the commercial, general, automobile, and excess liability insurance policies that show the Park District, its boards, commissions, officers, agents, and employees have been named as additional insureds by the insurers.

v. If the Permitee and Permitee's Contractor maintain broader coverage and/or higher limits than the minimums shown above, the District requires and will be entitled to the broader coverage and/or higher limits maintained by the Permittee and Permitee's Contractor.

e. No changes in insurance may be made without the approval of the Park District.

f. Notice of Cancellation. The Park District requires thirty (30) days written notice of cancellation of any insurance required by this Permit. Additionally, the notice statement on the certificate should not include the wording "endeavor to" or "but failure to mail such notice shall impose no obligation or liability upon the company, its agents or representatives" (or similar wording).

5. Permittee and Permittee's Contractor agree to indemnify, hold harmless, defend and protect Park District, its officers, directors, agents, employees, invitees (each of which is an indemnitee) from and against any and all claims, losses, damages, demands, liabilities, suits, costs, expenses (including attorneys' fees), penalties, judgments, or obligations whatsoever for or in connection with injury (including death) or damage to any person or the loss or damage of property to whomsoever belonging or pecuniary or monetary loss resulting from, arising out of, or in any way related to activity conducted by or the omission of Permittee or Permittee's Contractor, including but not limited to Permittee's or Permittee's Contractor's development, construction, occupation, use, operation, maintenance and/or removal of the property, premises, or any facilities or operations thereon, including events occurring on or off the property, premises, or facilities, regardless of how the injury or damage was caused or suffered, unless the injury or damage resulted from the sole negligence or the intentional and willful misconduct of the Park District, its officers, directors, agents or employees.

6. Permittee agrees to restore any park facility disturbed to its pre-construction/project condition. The Park District may elect to make repairs and charge the Permittee the cost thereof. At the Permittee's sole expense, the Permitee shall provide a pre-construction photo and/or video record to document the site conditions before the start of the work.

7. Prior to any grading, trenching, digging, ditching, drilling, augering, tunneling, scraping or any other type of excavation, the Permittee shall provide the Park District with an initial inquiry identification number from Underground Service Alert.

8. Survey monuments shall be protected. Any survey monuments or property corners removed or disturbed shall be replaced at the Permittee's sole expense using survey practices acceptable to the Park District.

9. After both entering and exiting East Bay Regional Park District property, all gates must be closed and locked immediately.

10. All work performed shall be consistent with Encroachment Permit Application dated, 05/14/2019 and all documents submitted to the Park District, attached as Exhibit(s) 1 through 1 and Supplementary Condition(s) S1.1 through S1.5.

11. Permittee and Permittee's Contractor shall implement Best Management Practices (BMPs) consistent with Storm Water Pollution Prevention Plan (SWPPP).

12. Permittee shall implement the following invasive weed BMP's in lieu of submitting an Integrated Pest Management Plan and weed abatement program.
    - ☑ a. Permittee shall use only weed-free straw mulch.
    - ☐ b. Permittee shall wash all project equipment, prior to entering the work area. All vehicles shall be cleaned of dirt and debris per EBRPD Decontamination Protocol 2017 (attached).
    - ☐ c. Permittee shall incorporate top soil salvage into the excavation efforts. The top 2-3 inches of soil will be scraped/excavated and placed in a separate location from all other excavated material. Upon the completion of Construction, the salvaged top soil will be placed back over the excavated area.
13. If hazardous waste is transported, Permittee shall provide the appropriate copy of the Uniform Hazardous Waste Manifest to the Park District.
14. No construction material shall be stored, nor equipment parked on Park District land.
15. No monofilament plastic mesh or line will be used for erosion control.
16. All vehicles traveling on Park District land shall be limited to speeds not to exceed 15 MPH. All vehicles shall yield right of way to park and trail users.
17. Upon completion of the work all debris, scraps, material, etc., shall be removed from the parkland.
18. All work performed within the parkland shall conform to recognized standards of construction.
19. The Permittee shall cease work in the vicinity of any archaeological resources that are revealed and notify the Park District immediately. A qualified archaeologist, retained by the Permittee, will evaluate the situation and make recommendations to the Park District concerning the continuation of the work. All resulting recommendations shall be incorporated in the work at no additional cost to Park District.
20. The Permittee is responsible for meeting all requirements of California Public Resources Code, Sections 4427 and 4431.

    SECTION 4427. During any time of the year when burning permits are required in an area pursuant to this article, no person shall use or operate any motor, engine, boiler, stationary equipment, welding equipment, cutting torches, tarpots, or grinding devices from which a spark, fire, or flame may originate, which is located on or near any forest-covered land, brush-covered land, or grass-covered land, without doing both of the following:

    (a) First clearing away all flammable material, including snags, from the area around such operation for a distance of 10 feet.
    (b) Maintain one serviceable round point shovel with an overall length of not less than forty-six (46) inches and one backpack pump water-type fire extinguisher fully equipped and ready for use at the immediate area during the operation.

    This section does not apply to portable power saws and other portable tools powered by a gasoline-fueled internal combustion engine.

    SECTION 4431. During any time of the year when burning permits are required in an area pursuant to this article, no person shall use or operate or cause to be operated in the area any portable saw, auger, drill, tamper, or other portable tool powered by a gasoline-fueled internal combustion engine on or near any forest-covered land, brush-covered land, or grass-covered land, within 25 feet of any flammable material, without providing and maintaining at the immediate locations of use or operation of the saw or tool, for firefighting purposes one serviceable round point shovel, with an overall length of not less than 46 inches, or one serviceable fire extinguisher. The Director of Forestry and Fire Protection shall by administrative regulation specify the type and size of fire extinguisher necessary to provide at least minimum

assurance of controlling fire caused by use of portable power tools under various climatic and fuel conditions.

The required fire tools shall at no time be farther from the point of operation of the power saw or tool than 25 feet with unrestricted access for the operator from the point of operation.

21. This Permit allows temporary trail or road closure only where allowed by Park Supervisor.
22. Permittee shall review Conditions of this Permit with all employees and subcontractors prior to any work.
23. The work site shall be enclosed by suitable barricades, fencing, signs and lights, as approved by Park District Representative, to warn and protect public and traffic effectively.
24. Excavations made within the limits of the parklands shall be backfilled or securely covered before leaving the work for the night.
25. Permittee shall provide the Park District with copies of any reports or findings made as a result of this access.
26. Permittee shall provide the Park District with GIS data for any underground or above ground utilities installed or repaired under this Permit. The data shall be provided in the ESRI Shapefile format (.shp) in the following projection:
    a. Projection: CA Stateplane Zone III
    b. Datum: NAD83
    c. Units: Feet
27. Smoking and/or vaping is prohibited on Park District property.
28. This Permit does not authorize tree trimming or tree removal.
29. This Permit can be revoked at any time.
30. Permittee shall notify the Park Supervisor once the project is completed. A site visit may be scheduled to confirm all Conditions of this Encroachment Permit have been completed to Park District Representatives' satisfaction.
31. **A copy of this fully executed Encroachment Permit must be on site and presented to East Bay Regional Park District personnel upon request.**

Subject to the above conditions, A PERMIT IS HEREBY ISSUED FOR:

Access to the Marsh Creek Trail for the Contra Costa County Flood Control and Water Conversation Three Creeks Parkway Restoration Project.

ISSUED BY: _____ **DATE**: _____

Nate Luna, Project Manager

CONDITIONS ACCEPTED BY:_____ **DATE**: _____

Permittee

East Bay Regional Park District Encroachment Permit Supplementary Conditions

PERMIT NUMBER:	034E-19-651

Supplementary Condition(s): S1

Condition(s):

The purpose of the Supplementary Conditions is to amend the Encroachment Permit Conditions to establish certain conditions to the control and execution of the work of this Encroachment Permit.

S1.1 **All work shall be in accordance with the following Documents submitted to the East Bay Regional Park District as part of the Encroachment Permit Application:**

a. Three Creeks Parkway Restoration Project, Civil Set, 100% Set May 8, 2019. Not Attached.

S1.2 **Condition 3. Add the following: Trail Closure Notice:**

a. Permitee shall notify the Park Supervisor thirty (30) days prior to start of the project trail closure. Park Supervisor will notify the Park District Public Affairs department to post the trail closure notice on the Park District website**.**

S1.3 **Condition 23. Add the following:**

a. Permittee shall provide and install CONSTRUCTION NOTICE signs, a minimum size of 30" x 30", ten working days prior to any work on the trail at each intersection of all trail crossings affected by the project. Signs shall state the project name, construction dates and contact phone number for the Contractor. Sign notification wording, size and installation method shall be approved in advance by the Park Supervisor.
b. Detour signage will be clearly displayed.

S1.4 **Add Condition 35: CONSTRUCTION MATERIAL LAYDOWN ("LAYDOWN"):**

a. Permittee may elect to erect temporary fencing around the useable perimeter of Laydown with entrance gates having both Permitee and EBRPD locks installed.
b. Permittee acknowledges that District shall continue to use Laydown for District purposes and District shall require unobstructed access to all District materials stored at laydown.
c. Permittee shall be responsible for protection of all equipment and materials stored at Laydown area. District shall hold no responsibility for loss or damage to Permittee's property from any cause.
d. Any grading and modification to Laydown Area shall be approved in advance by the Park Supervisor.
e. In the event of conflict or inconsistency between Permittee's Contract Documents and Conditions of this Permit, the most stringent shall prevail.
f. Permittee shall comply with all applicable laws and regulations regarding spill prevention and response.
g. If vehicles or equipment need to be serviced onsite, then care shall be taken to prevent spillage onto the ground surface. Vehicles and equipment shall be parked on asphalt over drip pans while being serviced. Care shall be taken to gather and dispose of wastes off-site in a legal manner. Any

spillage onto the ground surface shall be reported and cleaned up. In order to minimize potential pollution from spillage:

i. A stockpile of spill cleanup materials (rags, absorbents, etc.) shall be onsite.
ii. If a spill or leak occurs, contain immediately and be particularly careful to prevent leaks and spills from reaching the gutter, street or storm drain. Do not wash spilled material into gutter, street, storm drain or creek.
iii. Report any hazardous materials spills immediately.

h. Inspect vehicles and equipment for leaks frequently. Use drip pans to catch leaks until repairs are made; repair leaks promptly
i. At the end of Work, Park Supervisor and Permittee shall consult to establish a Contractor's punch list for returning the land to conditions acceptable to the District. Park Supervisor shall have final authority in making determination that land has been returned to an acceptable condition.
j. Upon project completion, if re-vegetation efforts are necessary, the Permittee shall seed the work area and area used for laydown using a seed mix provided by the Park Supervisor.
k. Permittee shall not store bulk hazardous materials in the Laydown. Specifically, flammable liquids, solvents, oils, and other material that typically require secondary containment shall not be permitted to be stored on the ground, in containers, or in tanks located at the Laydown.
l. Permittee shall employ Best Management Practices for all activities at the laydown including, but not limited to, storm water and safety.
m. Permitee may have a vendor install and maintain a portable sanitary facility at Laydown Area and/or Temporary Construction Enclosure ("Laydown" or "TCE") for use by company and subcontractors throughout the duration of construction. Placement of the facility will be at the direction of the Park Supervisor.

S1.5 **Add Condition 36: FOOD SCRAPS AND CONTAINERS:**

All workers will ensure their food scraps, paper wrappers, food containers, cans, bottles, and other trash from the project area are deposited in covered or closed trash containers to avoid attracting predators. The trash containers will be removed from the project area at the end of each workday.

S1.6 EAST BAY REGIONAL PARK DISTRICT FIRE SEASON RESTRICTIONS & PREVENTION

The East Bay Regional Park District restricts activities that can be performed in the Parks during the fire season based on the level of fire danger. EBRPD typically announces the start of the Fire Season in May of each year and usually doesn't end the season until November, depending on weather and fuel conditions. This section applies to work occurring during the declared Fire Season and during any Level I, Level II, or Red Flag conditions. It is the responsibility of the Permitee ("Contractor") to follow these requirements and to contact the District Representative for clarification.

01.1 General Fire Season Requirements

.1 No smoking or vaping: Smoking or vaping is not allowed on the East Bay Regional Park District property.

.2 Emergency Notification: Contractors shall maintain at least one working cell phone, radio, or satellite phone capable of communicating in case of an emergency, such as medical or fire incident. In an emergency, call 911 then notify the EBRPD Communications Center by calling 510-881-1833.

.3 Vehicle use: Contractor must remain on improved roads when driving between work sites. No cross country or off-road driving is permitted. All vehicles must be parked on paved or dirt improved areas near the work site to minimize igniting grass.

.4 Spark Arresters: Spark arresters affixed to the exhaust system of engines or vehicles shall not be mounted in a manner as to allow flames or heat from exhaust system to ignite any flammable material.

.5 Fueling Equipment: When fueling equipment, allow it to cool in an area where there is no flammable vegetation that can be ignited by the hot exhaust, preferably in a dirt or paved area.

.6 Equipment Requirements mobile/on-site: Provide at least one serviceable round-point shovel with an overall length of not less than 46 inches and one five-gallon water fire extinguisher or backpack pump. Unless otherwise noted, The Contractor shall provide and maintain a fire pump with a minimum of 350 gallons of water and a 1-inch hose line in the immediate work area. The hose line must be a minimum of 50 feet in length with an adjustable combination nozzle that can provide a fog pattern and straight stream capability of 50 gallons per minute.

.7 Fire Department monitoring: An EBRPD Fire Department representative may be on-site for initial start of work and may make periodic inspections.

.8 Applicable laws and Regulations: California Public Resource Code Sections 4442 & 4443 Spark arrester & muffler requirements; 4427 Clearance & equipment requirements. California Health and Safety Code Sections 13001 Causing Fire; 13005 Use of Hydrocarbon Engine without Exhaust Spark Arrester; 13007 & 13009 liability.

01.2 The District will determine when weather and wildland fuel conditions increase fire danger to Very High (Level 1) or Extreme (Level 2) in certain Fire Danger Rating Areas (FDRA's) on a daily basis. The District's Fire Danger Rating Areas Map and Park locations can be found on the District's website at: https://www.ebparks.org/about/fire/fire_danger_and_weather_information.htm. The Contractor shall check the District's website or call the recorded phone message at 510-544-3059 to check if there are any Level 1, Level 2 Restrictions or park closures resulting from a Red Flag Warning issued by the National Weather Service (see section 01.18). Information is updated by 6:00 pm for the following day.

.1 EBRPD Fire Season Level 1 Restrictions, Very High Fire Danger

a. Vehicles are restricted to driving only on designated roadways; no cross-country or off-road driving is permitted.

b. No use of combustion powered equipment (e.g. mowers in rough areas, weed eaters, chain saws, welders and generators) outside of irrigated areas, designated campgrounds or developed recreational areas is allowed unless the Extra Protection Fire Safety Measures listed below (Section 01.19) are implemented.

c. Maintenance of irrigated areas and road grading are permitted.

d. Prepare and check all fire equipment for readiness.

.2 EBRPD Fire Season Level 2 Restrictions, Extreme Fire Danger

a. Vehicles are restricted to driving only on designated roadways; no cross-country or off-road driving is permitted.

b. No use of combustion powered equipment (e.g. mowers in rough areas, weed eaters, chain saws, welders and generators) outside of irrigated areas, designated campgrounds or developed recreational areas is allowed unless the Extra Protection Fire Safety Measures listed below (Section 01.19) are implemented.

c. Prepare and check all fire equipment daily for readiness.

01.3 National Weather Service Red Flag Warning: NO work within or adjacent to grass, bush or forest covered areas shall occur within 24 hours of a predicted red flag event as determined by the National Weather Service (https://www.weather.gov).

.1 Red Flag Warning and Reduced Suppression Resources

The Park will be closed, and no Contractor access will be allowed, During Red Flag conditions when the Park District Fire Department has determined that adequate fire suppression resources are not available. Park closures will be noted on the Park District website and recorded message as noted in section B above.

.2 A representative of the East Bay Regional Park District Fire Department or other fire jurisdiction having authority may direct work to stop at any time.

01.4 Extra Protection Fire Safety Measures: The Contractor shall submit an Extra Protection Fire Safety Measures Plan clearly describing how the measures below will be implemented. No **welding, cutting, grading, grinding, and mowing (WCGGM)**, or other activity potentially creating a fire hazard, is allowed until this plan has been approved by the Park District. The following is intended as a guideline for the operational procedures to be used by Contractors when performing **WCGGM,** within or adjacent to grass, bush or forest covered areas at any time during the fire season in the Park District:

.1 Weather Sampling: Prior to commencement of WCGGM, a weather sampling shall be conducted at the work site utilizing a weather device such as "Kestrel," capable of monitoring temperature, wind and relative humidity (RH).

.2 Additional weather samplings: will be conducted every two (2) hours thereafter until completion of the operation.

a. Temperature: If the ambient temperature reaches 80 degrees Fahrenheit at any time during the operation, weather sampling must be taken hourly.

b. In the event that the following readings are noted, **WCGGM OPERATIONS WILL CEASE IMMEDIATELY:**

When the ambient air temperature reaches 80 degrees Fahrenheit or above

AND EITHER

The relative humidity is at or below 30 percent

OR

Sustained wind speeds reach 10 mph or higher

c. Note that adjusting to an earlier scheduled work time may be necessary to avoid the worsening afternoon fire conditions.

d. The Contractor shall record the Relative Humidity (RH), ambient temperature and wind speed into a daily log.

.3 Active fire monitoring during welding, cutting or grinding operations: Contractor is required to provide active fire monitoring, which minimally consists of a non-divertible fire pump with a minimum of 350 gallons of water and a 1-inch hose line in the immediate work area. The hose line must be a minimum of 50 feet in length with an adjustable combination nozzle that can provide a fog pattern and straight stream capability of 50 gallons per minute.

.4 Wetting area during cutting, grinding or welding: Contractor must adequately wet the work area with water utilizing a water truck or equivalent portable water source to eliminate potential fire ignition. Contractor must also monitor the area for drying conditions, apply additional water as necessary and monitor work area for any signs of fire ignition following WCGGM operations.

.5 Fire clearance during cutting, grinding or welding: Contractor must provide a minimum of 20 feet of fire clearance around each welding area with a fire proof barrier and/or clearing down to bare soil.

.6 Active fire watch during mowing or grading operations: Contractor shall provide active fire patrol following behind the mower or ground engaging equipment (grader, dozer, etc.), which minimally consists of a non-divertible pickup truck equipped with a fire pump with a minimum of 350 gallons of water with a 1-inch hose line, staffed with at least one person in the pickup truck. The hose line must be a minimum of 100 feet in length with an

adjustable combination nozzle that can provide a fog pattern and straight stream capability of 50 gallons per minute.

EAST BAY REGIONAL PARK DISTRICT
ENCROACHMENT PERMIT APPLICATION

DATE: 05/14/19

PERMIT NO. EBRPD USE

PERMIT FEE EBRPD USE

EBRPD FACILITY AFFECTED Marsh Creek Regional Trail

DESCRIPTION

Three Creeks Parkway Restoration Project. Restoration and channel widening along 4,000 linear feet of Marsh Creek between Dainty Avenue and the Union Pacific Rail Road. Construction will require the closure and detouring of the Marsh Creek Regional Trail. See attached for more detail.

ATTACHMENTS/ENCLOSURES

Attached project description and construction documents.

INSURANCE CARRIER

Will be provided by the selected construction contractor.

ESTIMATED START DATE 4/15/20

ESTIMATED COMPLETION 2/1/21

OTHER AGENCY PERMITS REQUIRED

CDFW Lake and Streambed Alteration Agreement; RWQCB (Region 5) 401 Certification; US Army Corps 404; East Contra Costa County HCP Planning Survey Report; City of Brentwood Grading/Building

APPLICANT NAME

Contra Costa County Flood Control and Water Conservation District

ADDRESS

255 Glacier Drive, Martinez, CA 94553

CONTACT PERSON Claudia Gemberling

PHONE 925.313.2192

EMAIL claudia.gemberling@pw.cccounty.u

FAX

East Bay Regional Park District

2950 Peralta Oaks Court
PO Box 5381
Oakland, CA 94605
510 544-2562
510 569-1432, fax

Project Description

The Three Creeks Parkway Restoration project is a multi-benefit flood control and creek restoration project. It proposes to improve flood conveyance capacity and restore ecological function along an approximately 4,000 linear feet section of Marsh Creek located in Brentwood, California by widening the channel with a floodplain bench and planting with native vegetation. Modifications to the Marsh Creek Regional Trail include minor re-alignment near the at-grade crossing at Central Boulevard, an underpass beneath the Central Boulevard bridge, and a possible pedestrian bridge to link to future City of Brentwood trails on the west side of Marsh Creek.

Construction is anticipated to begin late spring of 2018. Excavation and grading activities would occur during the dry season (June to October) with plant restoration occurring afterwards (November to December). Construction will require the closure and detouring of the Marsh Creek Regional Trail.

Channel Widening

The main function of expanding the channel is to create enough conveyance capacity to allow for the planting of woody riparian vegetation (trees) while also safely conveying large flood flows. The project would increase the cross-sectional area of the stream channel by excavating 26,000 cubic yards (10,500 for upper, 2,500 for middle, and 13,000 for lower reach,) of earth along approximately 4,000 linear feet of both banks of Marsh Creek to create new floodplain.

Revegetation Activities

Currently, no trees exist within either the low-flow channel or the larger flood control channel. Some trees do currently exist on the non-creek side of the Marsh Creek Regional Trail in the upper reach. Where possible, these will be protected and retained. Following the construction of channel widening activities, depending on location, the project area would be planted with wetland plants, grasses, scrub, and trees. Riparian trees would be planted on the upper banks and along the creek side and would include valley oak, sycamore, live oak, box elder, buckeye, cottonwood, and willow. Slopes and banks would be planted with grassland and scrub species, which would include creeping wild rye, California brome, purple needlegrass, dense-flowered lupine, mugwort, common fiddleneck, elegant clarkia, and California poppy. Areas of the floodplain would be planted with seasonal wetland species that will include, but not be limited to, creek clover, Baltic rush, and deer sedge. Planting would occur in November and December and would be accomplished by hand tools and power augers. Specific ways and means will be determined by the contractor.

Trail Extension below Central Boulevard Bridge

The Marsh Creek Regional Trail currently crosses the busy Central Blvd. at grade. The project will extend the trail beneath the Central Blvd. bridge (Photo 1). This trail extension will consist of concrete below the OHWM (to be closed when flooded) (approximately 170 LF, 0.04 AC, 32 CY of concrete and 42 CY of base course). This section of trail will be maintained by the City of Brentwood. An excavator, steamroller, front-end loader, and road paving machine may be used. Equipment to be used will be determined by the contactor.

Photo 1: Area beneath Central Blvd. Bridge where trail extension will go. Note bridge footings that will require riprap protection.

Pedestrian Bridge

Contingent on available funding, the project may install a pedestrian bridge across Marsh Creek just upstream of the confluence with Sand Creek (Sheet L-3.4). The bridge will be 10 feet wide and approximately 100 feet long. If funding is not available, the project may install the abutments or nothing at all.

Proposed Detour Route

The figure below shows the proposed detour route around the project site while the trail is closed. The project team evaluated several options and this is the City of Brentwood's preferred route.

The detour utilizes an existing Class I trail along the UPRR, a bike lane along Central Boulevard, a bike lane along Griffith Avenue and a residential street with sidewalks along Dainty Avenue. In the event that the upper reach of the project Central Boulevard to Dainty Lane is not under construction while the lower reach (Central Boulevard to UPRR) is, the detour will leave the Marsh Creek Regional Trail at Central Boulevard (show in orange in the figure below).

The project will take several months to complete and this will be the primary route around the construction zone. Actual closure dates will be determined by the selected contractor and their staging and phasing needs.

Figure 1: Proposed detour during trail closures.

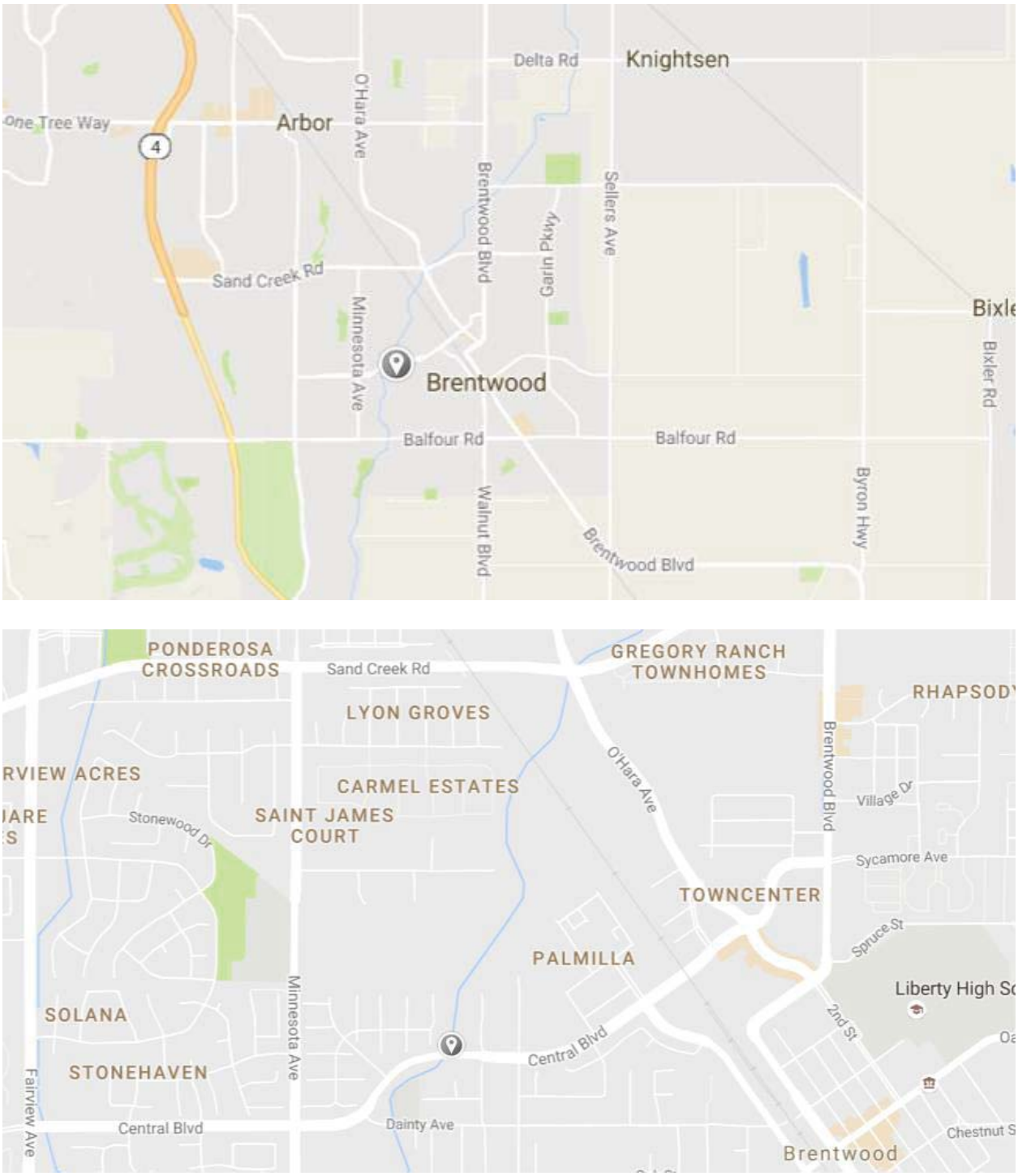

Figure 2. Project Location